ASSEMBLY, INSTALLATION & SERVICING MANUAL FOR AMBIRAD NOR-RAY-VAC CONTINUOUS RADIANT TUBE SYSTEM

INDEX **Section**

WARNINGS

AmbiRad equipment must be installed and maintained in accordance with the relevant provisions of the Gas Safety (Installations and Use) Regulations 1998 for gas fired products. Due account should also be taken of any obligations arising from the Health and Safety at Works Act 1974 or relevant codes of practice. In addition the installation must be carried out in accordance with the current IEE wiring regulations (BS 7671), BS 6896 (Industrial & Commercial) and any other relevant British Standards and Codes of Practice by a qualified installer. All external wiring MUST comply with the current IEE wiring regulations.

Document Index.

Introduction.

Welcome to the range of Nor-Ray-Vac 'LR' series continuous radiant tube heaters. The Nor-Ray-Vac 'LR' series system complies with the requirements of the European Gas Appliance Directive BS EN777-4. Local regulations may vary in the country of use and it is the installers responsibility to ensure that such regulations are satisfied.

All installation, assembly, commissioning and service procedures must be carried out by suitable qualified competent persons to the statutory regulations in the country of use.

When assembling, installing, commissioning and servicing is undertaken on radiant tube heaters specified in these instructions, due care and attention is required to ensure that working at height regulations are adhered to at the mounting heights specified.

***PLEASE READ** this document prior to installation to familiarise yourself with the components and tools you require at the various stages of assembly.*

All Dimensions shown are in mm unless otherwise stated.

The manufacturer reserves the right to alter specifications without prior notice.

The Ambi-Rad Nor-Ray-Vac 'LR' series direct gas fired radiant heating system comprises of a continuous system with a number of burners located in series in a radiant branch, and a number of radiant branches manifolded together, linked by a tail pipe to a vacuum fan discharging the spent products of combustion to atmosphere. A system may comprise of just one burner and one vacuum fan, to multiple burners in multiple radiant branches with one or more vacuum fans.

To enable exact matching of operational needs within an area, distances between burners and ratings of the burners can vary. The unique feature of Nor-Ray-Vac 'LR' series is a radiant system which provides uniform heat coverage of the floor area, eliminating hot/cold spots.

The tube into which the burners are mounted and over which the reflectors are fitted and emits the maximum heat is called the radiant tube. The radiant heat emitted from the hot tube is directed downwards by reflectors. The remaining interconnecting tube is called the tail pipe and radiates with less intensity.

The operating temperatures of the tubes generally range from 200°C – 480°C max.

The action of the vacuum fan is three fold; to create a high negative pressure within the radiant tube and tail pipe so as to discharge the spent products of combustion from the system to a point outside the building being heated; to control the flow of gas and air through each burner in stoichiometric proportions; to draw carrier air into the tube system at the start of each radiant branch, in order to distribute the heat from the flame along the tube.

1. Installation Requirements.

Isolate any electrical supply to the heater and controller before proceeding.

1.1 Health and Safety

AmbiRad heaters must be installed in accordance with the relevant provisions of the Gas Safety (Installations and Use) Regulations 1998.

Due account should also be taken of any obligations arising from the Health and Safety at Works Act 1974 or relevant codes of practice. In addition the installation must be carried out in accordance with the current IEE wiring regulations (BS 7671), BS 6896: (Industrial & Commercial) and any other relevant British Standards and Codes of Practice by a qualified installer. Isolate all electrical supplies to the heater & controller before proceeding.

The system is assembled at high level suspended by chains from first fixings to the roof structure.
(First fixings by others)

For your own safety we recommend the use of safety boots and leather faced gloves when handling sharp or heavy items. The use of protective eye wear is also recommended.

1.2 Burner Model Definitions

NRVxxLR-EV = Nor-Ray-Vac continuous radiant tube heater only for use with branch end configurations.
NRVxxLR-IL = Nor-Ray-Vac continuous radiant tube heater only for use with in-line configurations.

xx denotes kW rating. Models available; 12, 18, 24, 32, 38 and 46

1.3 Heater Suspension

1.3.1 First considerations

- Clearances from combustibles must be maintained. (See figure 2)
- For ease of servicing there should be a minimum clearance distance of 500mm between the burners of the heating system and the building wall. This measurement can be reduced for perimeter type systems. (See figure 1a).
- For ease of servicing and burner removal minimum clearances should be maintained. (See figure 1b and 1c). In exceptional circumstances the burner lid may be slid diagonally for removal thus reducing the vertical distance.
- Ensure that the suspension is sufficiently flexible to allow for thermal expansion.

1.3.2 Suspending the heater - General

1.3.2.1 The first support is always positioned at the support lug suspension point on the end vent burner combustion chamber.

1.3.2.2 Subsequent supports are placed approximately 2.8m apart, including one at each combustion chamber location. This gives a maximum load per support of 24kg.

1.3.2.3 A support must always be located at a maximum distance of 2m from a tee or elbow fitting.

1.3.2.4 Except for the combustion chamber support lug suspension points, suspension support brackets are installed to support the tube section which is then covered with reflectors.

1.3.2.5 Tail pipe hangers are installed for the tube section which will be without reflectors.

If there are any doubts as to the strength or suitability of roof steelwork to which heaters are to be suspended, please refer to a Consultant, Architect or owner of the building.

Table 1. Minimum mounting heights

Model	Minimum Mounting Heights (m)
NRV12LR	3.0m
NRV18LR	3.6m
NRV24LR	4.0m
NRV32LR	4.7m
NRV38LR	5.3m
NRV46LR	6.0m

Figure 1.a Overall Dimensions

A - Burner Tube
B - LR Burner
C - Optional Perimeter Reflector
D - Wall

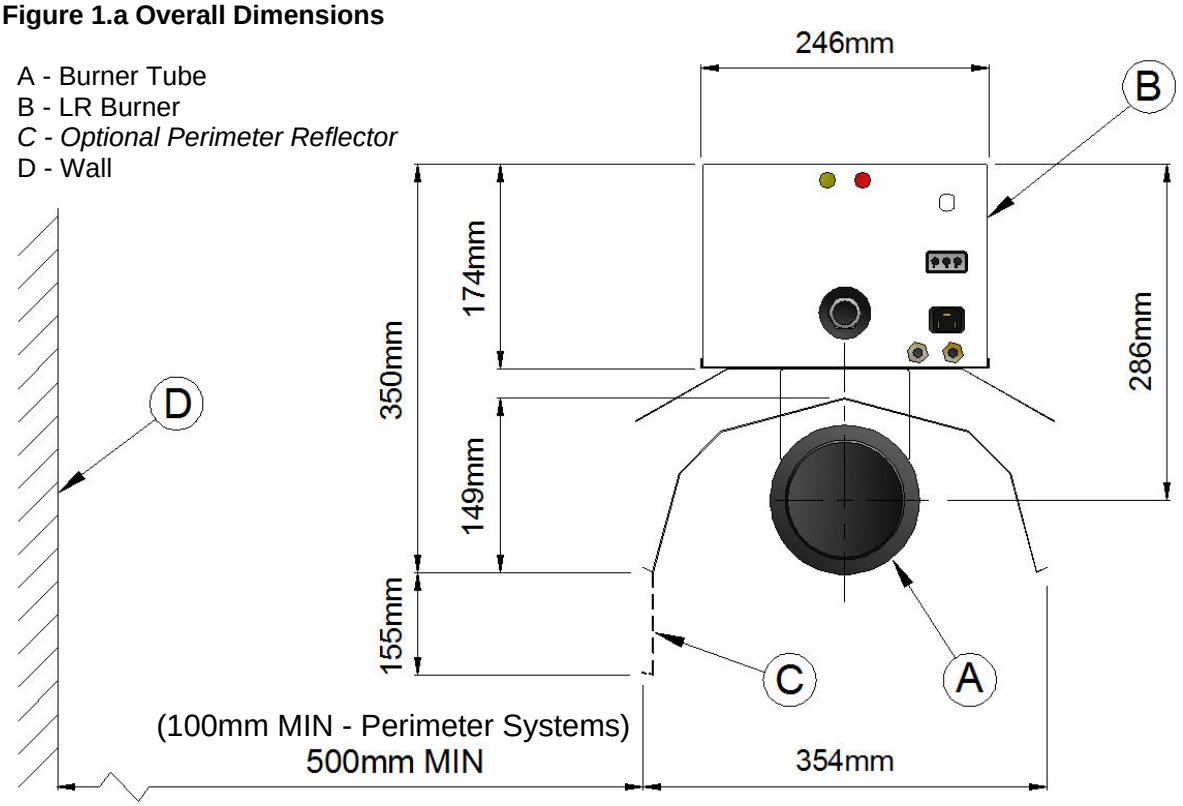

Figure 1.b Clearance for servicing - distances to walls and obstacles above.

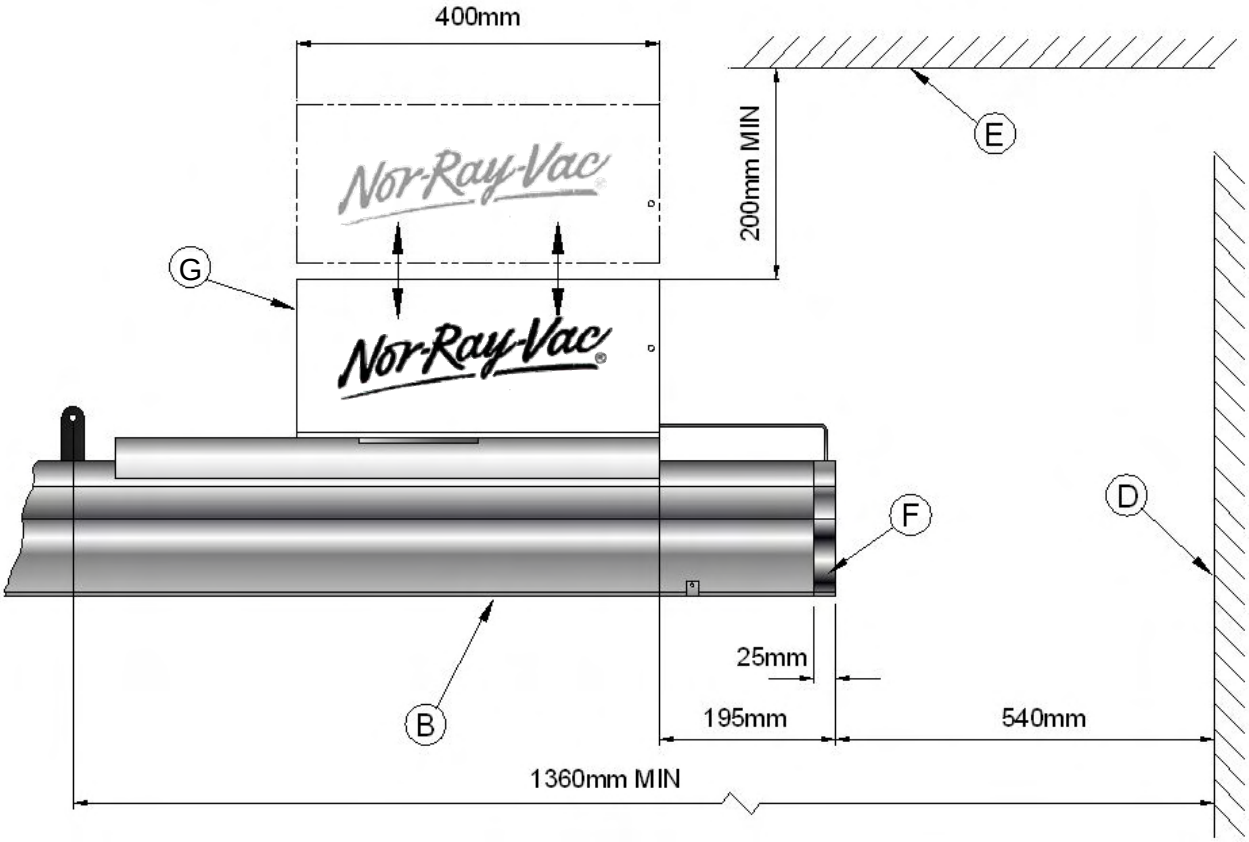

Figure 1.c Clearance for servicing - distances to obstacles above.

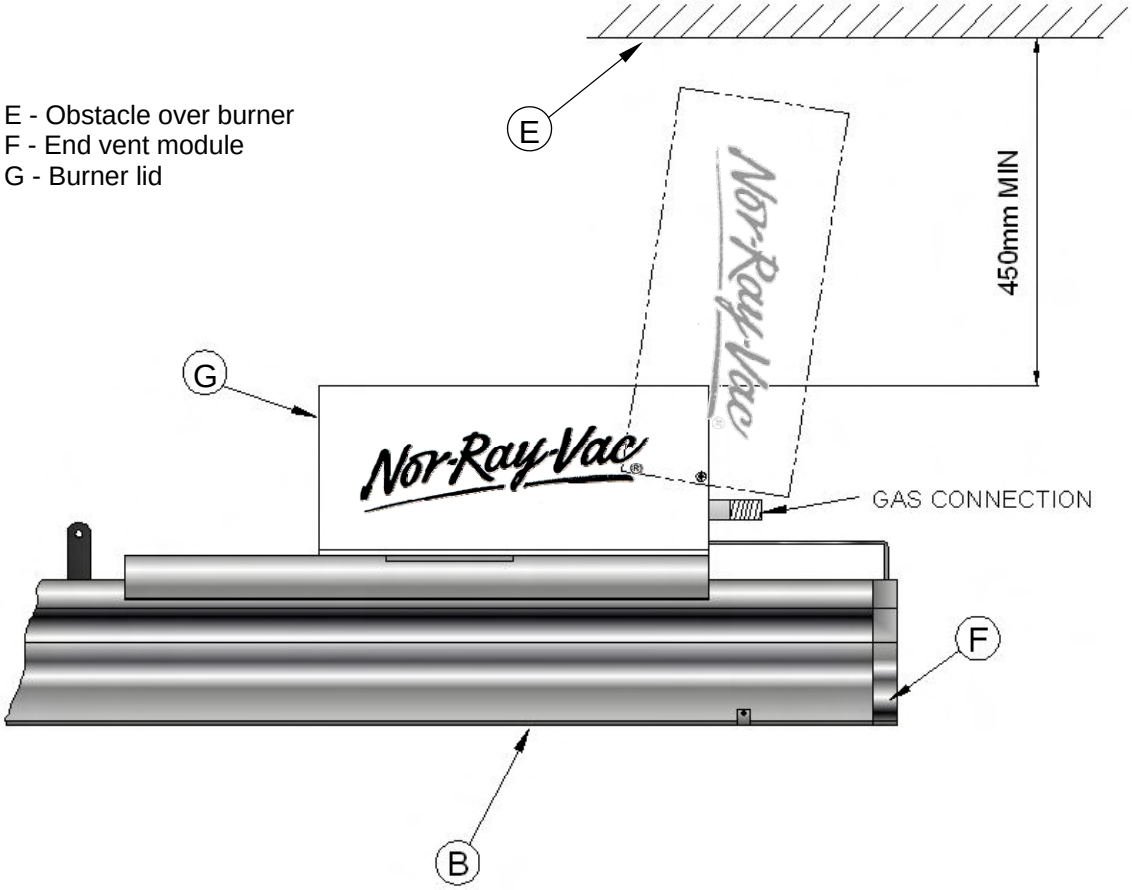

1.4 Clearance to Combustibles.

> ! The minimum clearances to combustible materials are given in table 2 below. These minimum distances MUST be adhered to at all times.

Figure 2 Diagram illustrating the clearance to combustibles

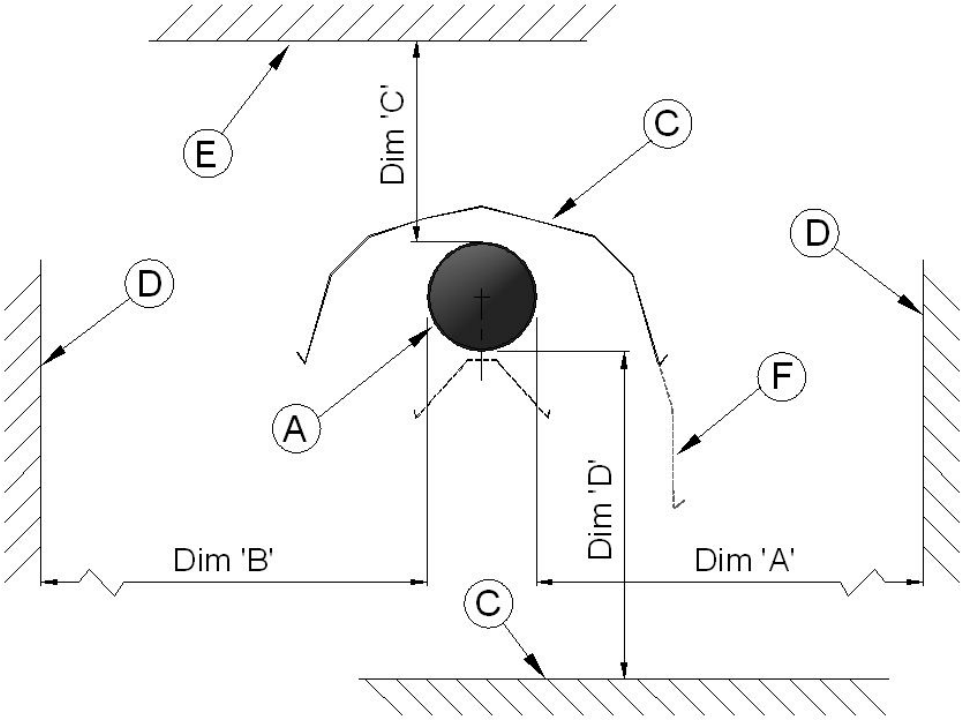

Distance from combustibles (distance from heat source that will produce a 50ºC rise in temperature above ambient of a black surface) **A** Radiant tube; **B** Standard reflector; **C** Combustible material underneath; D Combustible material on side; **E** Combustible material above; **F** Perimeter reflector;

Table 2

Burner Model		**NRV12LR**		**NRV18LR**		**NRV24LR**	
		End vent	In-line	End vent	In-line	End vent	In-line
Below tube							
Dim **D** Without undershield	mm	1120	1250	1120	1250	1120	1250
Dim **D** With undershield	mm	760	850	760	850	760	850
Dim **C** Above Tube	mm	250					
Horizontally							
Dim **B** Standard reflector	mm	600	770	600	770	600	770
Dim **A** Perimeter reflector	mm	305	450	305	450	305	450
Burner Model		**NRV32LR**		**NRV38LR**		**NRV46LR**	
		End vent	In-line	End vent	In-line	End vent	
Below tube							
Dim **D** Without undershield	mm	1440	1700	1570	2100	1700	2100
Dim **D** With undershield	mm	760	850	785	1050	850	1050
Dim **C** Above Tube	mm	250					
Horizontally							
Dim **B** Standard reflector	mm	700	850	700	1000	700	1000
Dim **A** Perimeter reflector	mm	305	510	305	600	305	600

1.5 Gas Connection and Supply

Before installation, check that the local distribution conditions, nature of gas and pressure, and adjustment of the appliance are compatible.

A competent or qualified engineer is required to either install a new gas meter to the service pipe or to check that the existing meter is adequate to deal with the rate of gas supply required.

Installation pipes should be fitted in accordance with BS 6896, so that the supply pressure, as stated in Table 3 will be achieved. It is the responsibility of the competent engineer to ensure that other relevant Standards and Codes of Practice are complied with in the country of installation.

Pipes of smaller size than the heater inlet gas connection must not be used. The complete installation must be tested for soundness as described in the country of installation.

The gas union service cock MUST be fitted in the gas supply close to the heater, but not onto the burner itself.

Take care when making a gas connection to the heater not to apply excessive turning force to the internal controls.

A flexible hose is installed to allow safe linear expansion to each burner without creating undue stress on the gas supply pipe work. It is therefore important that a tested and certified hose assembly made to ISO 10380, supplied with ½" BSP female cone seat adapters, is installed as per these instructions.

It is also important to ensure that expansion is taken up in the body of the flexible hose, and not on its attachment to the pipe work.

The cone seat adapter supplied on one end of the flexible gas hose provides a `swivel` action, and must be fitted on the burner using a ½" BSP barrel nipple to provide ease of disconnection for future servicing.

The installation layout described below is the only method recommended by the institute of gas engineers, the hose manufacturer, and AmbiRad and must only be carried out by a qualified/competent gas engineer.

Table 3 Gas Supply Pressures

Gas Category	**G20**	**G25**	**G30**	**G31**
Gas Type	Natural Gas	Natural Gas	Butane	Propane
Max Supply Pressure (mbar)	50	50	35	57.5
Min Supply Pressure (mbar)	17.5	20	20	25
Nominal Pressure (mbar)	20	25	29	37
Gas Supply	Connection R½ ½in BSP Internal Thread			

Figure 3. Correct Installation of Flexible Gas Connection

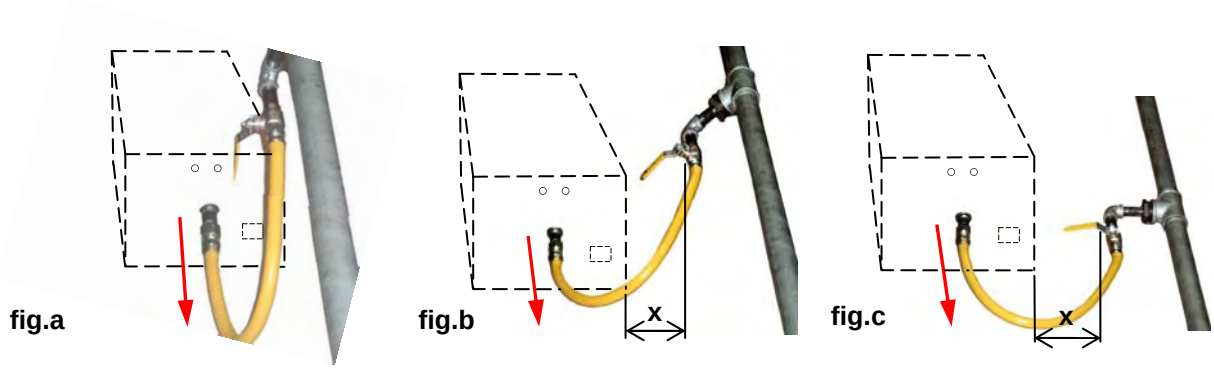

Depending on the specific installation, the flexible gas hose may be routed to the gas cock at any of the following angles in relation to the burner:

Vertical (fig.a)
45° angle (fig.b)
90° angle (fig.c)

Any other position in between these angles is acceptable.

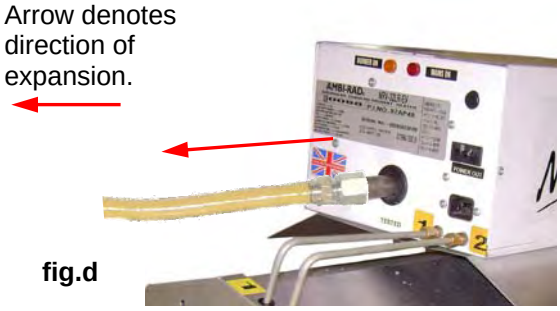

Care must be taken to observe the minimum pipe bend diameter (minimum 250mm, maximum 350mm) & pipe expansion distance (minimum 30mm, maximum 70mm) as shown in fig.e.

Maximum bend diameter for the hose is 450mm.

The correct installation as shown will allow for approx 100mm of movement due to expansion.

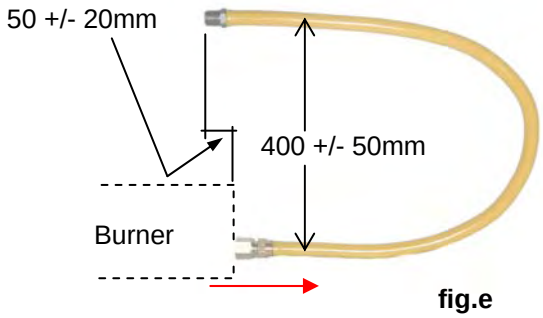

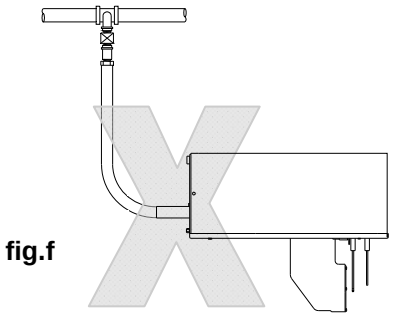

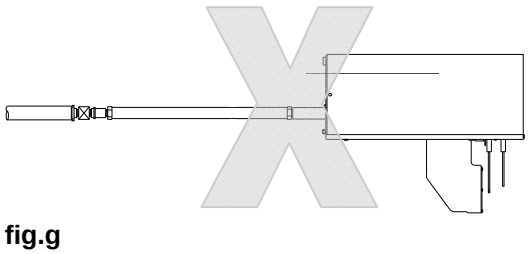

The methods shown in fig.f and fig.g are unacceptable, due to undue stress on the hose & fittings.

1.6 Electrical Connections

Standard burner 16W.
Current rating 0.05 amp per burner
Fuse: external 3 amp.

Each component carrying an electrical supply must be earthed.
Supply for burners is 230V 50Hz single phase.
* Exhaust fans are three phase 415V 50Hz.
* IP54 rated Inverter panel LRU's require a 230V single phase supply at 22A (B80/ B160) or 30A (B300)
* Standard LRU's require a 415V three phase supply at 25A (BH300)
** refer to individual site specifications*

All electrical work should be carried out to IEE standards by a competent electrician.

The electrical connection to the burner is made by means of a three pin plug-in power connector. Live, neutral and earth connections should be made via a flexible supply cable to the power connector and routed clear of the heater or tubes.

The flexible supply cables to each burner should be of 0.5mm² minimum and comply with BS 6500:2000. For fan and LRU supply, the wire size must be suitable for the current ratings as listed in Table 10.

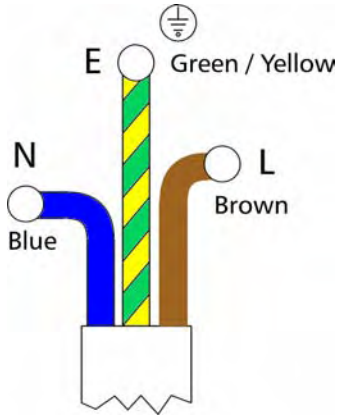

The wires in the mains lead are coloured in accordance with the following code: Green & Yellow Earth; Blue Neutral; Brown Live

The method of connection to the electrical supply must facilitate complete isolation and should be via a fused double pole isolator having contact separation of at least 3mm on all poles and supplying the appliance only.

We recommend use of AmbiRad approved controls. Please refer to; SmartCom control manual for siting and installation details and figures 4.l and 4.m

Where alternative controls are used, please refer to the manufactures instructions for their siting and installation details.

Figure 4.a. Typical Wiring Connections

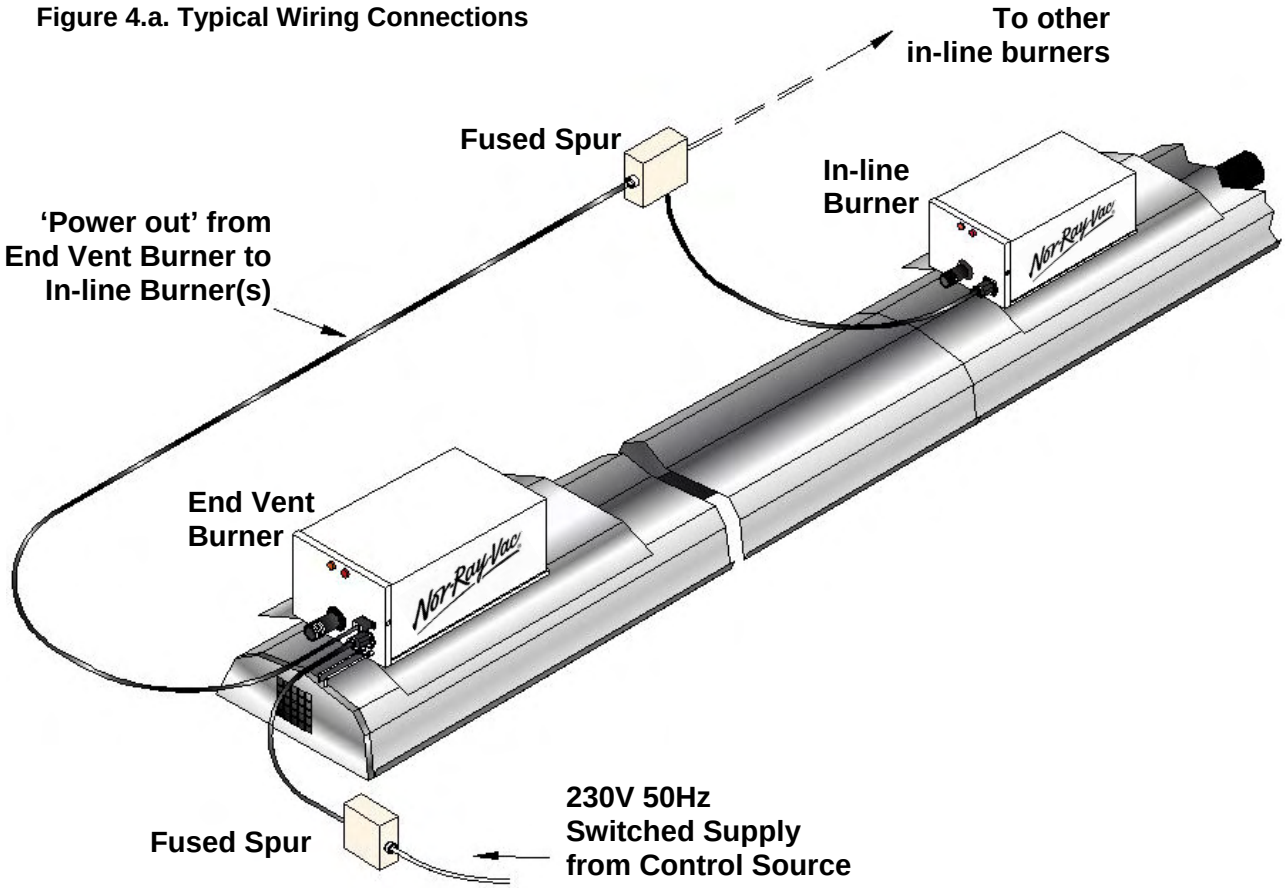

1.6.1 NRV LR system - Typical External Diagram

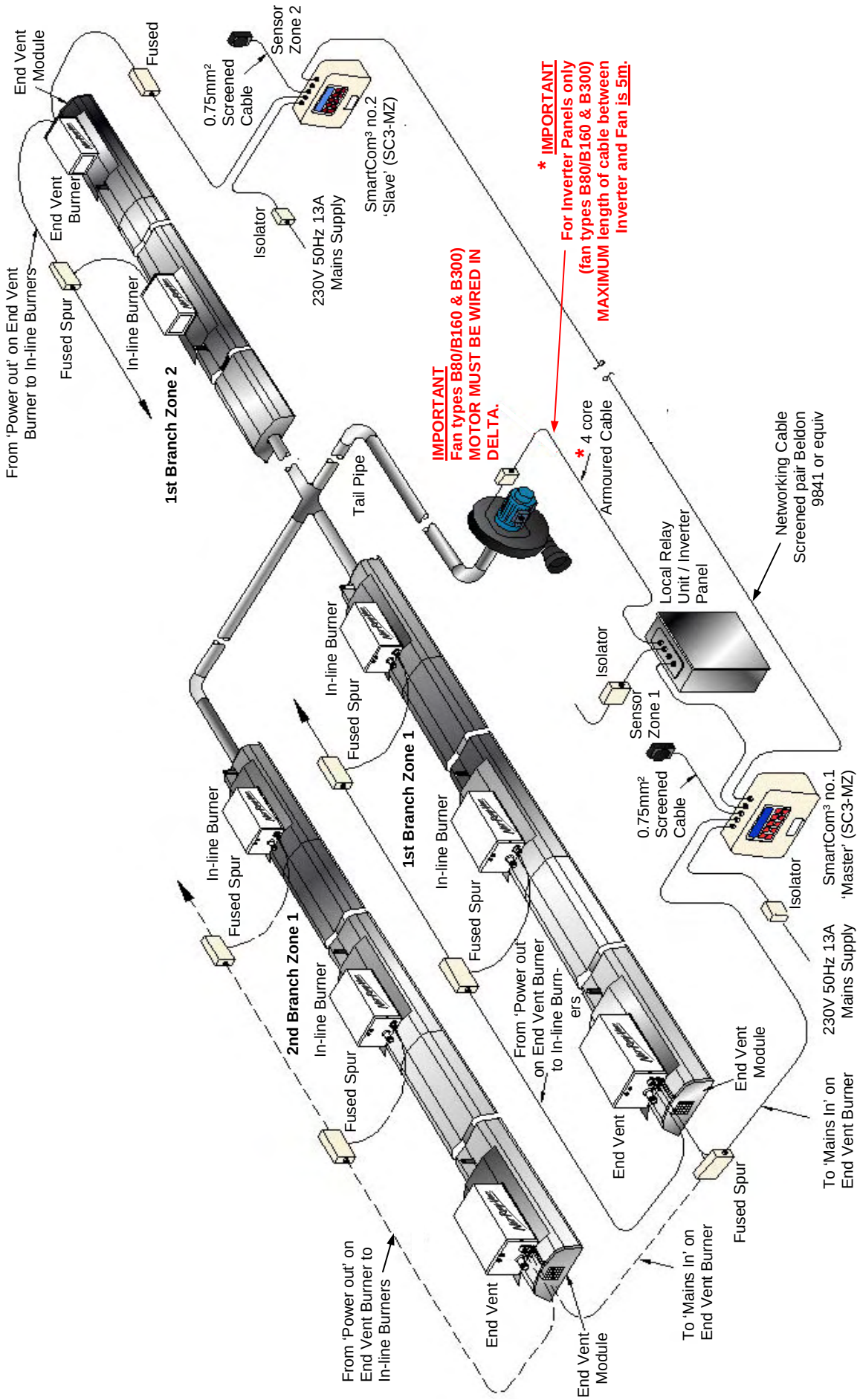

1.6.2 Wiring Details

Figure 4.c. LR internal wiring diagram - End Vent Burner (EV)

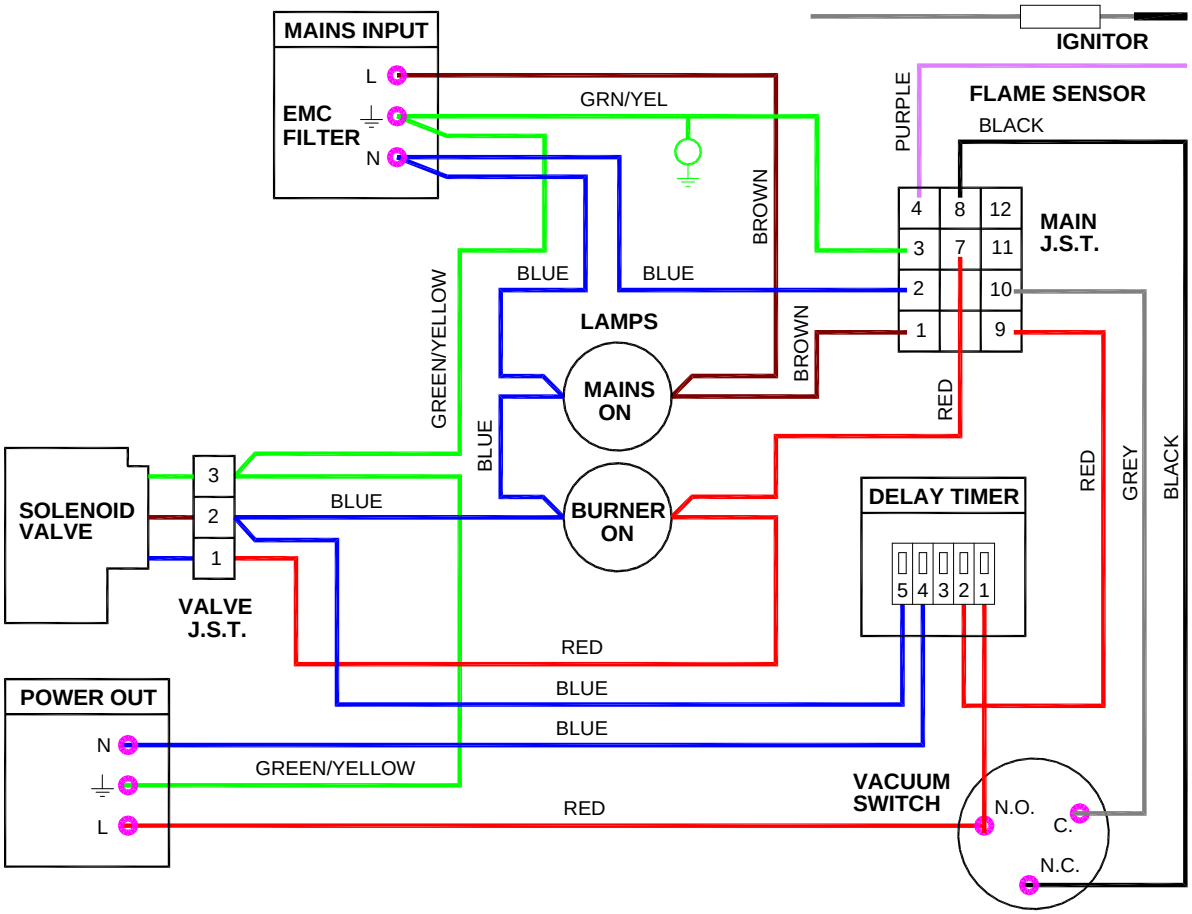

Figure 4.d. LR internal wiring diagram - In-line Burner (IL)

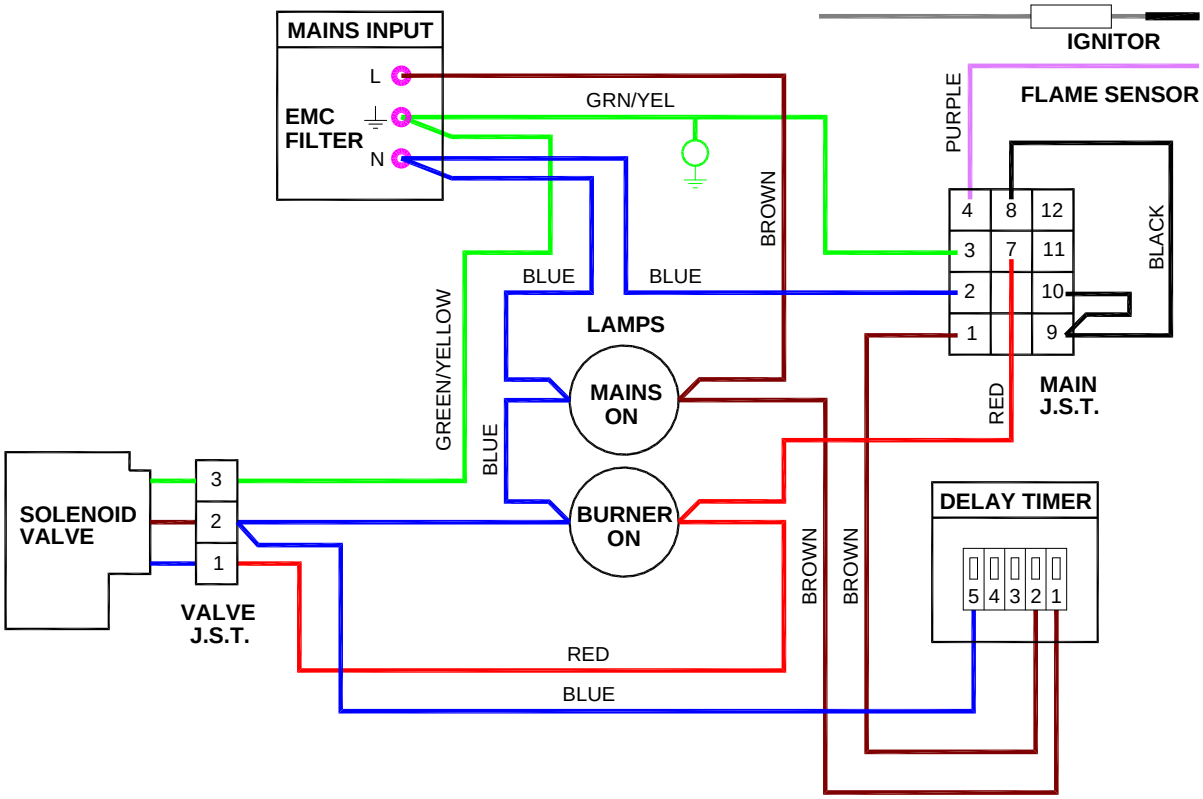

Figure 4.e. LR internal wiring diagram - End Vent Burner c/w N/O or N/C volt free Lockout contacts

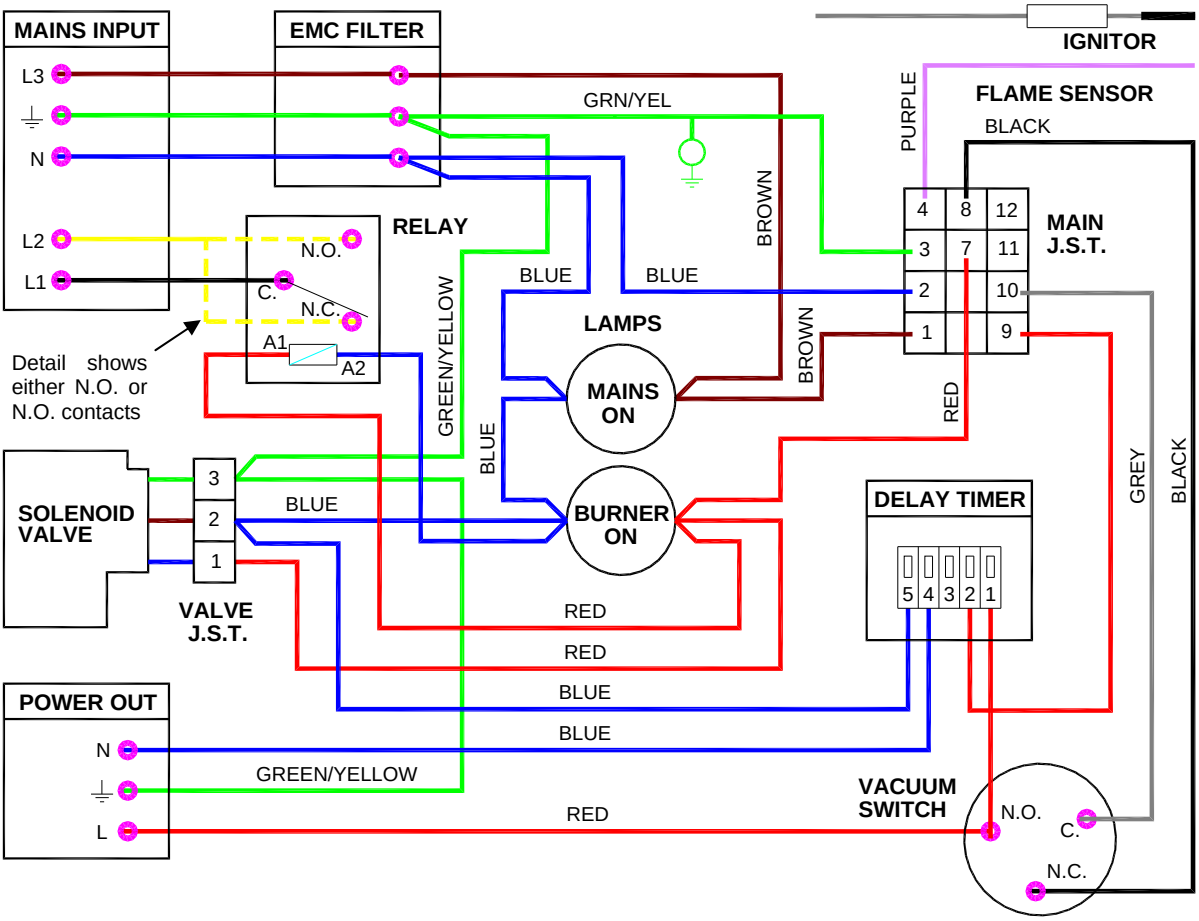

Figure 4.f. LR internal wiring diagram - In-line Burner c/w N/O or N/C volt free Lockout contacts

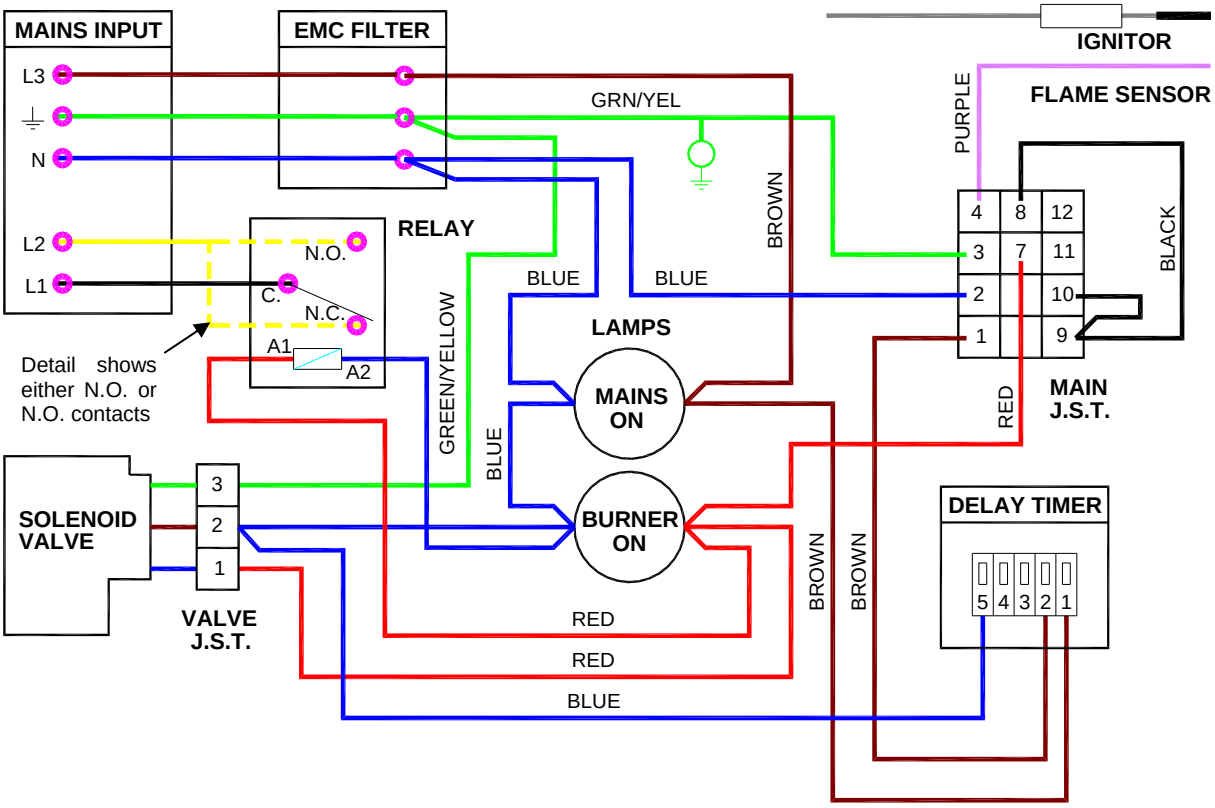

Figure 4.g. LR internal wiring diagram - End Vent Burner c/w 3 way solenoid valve

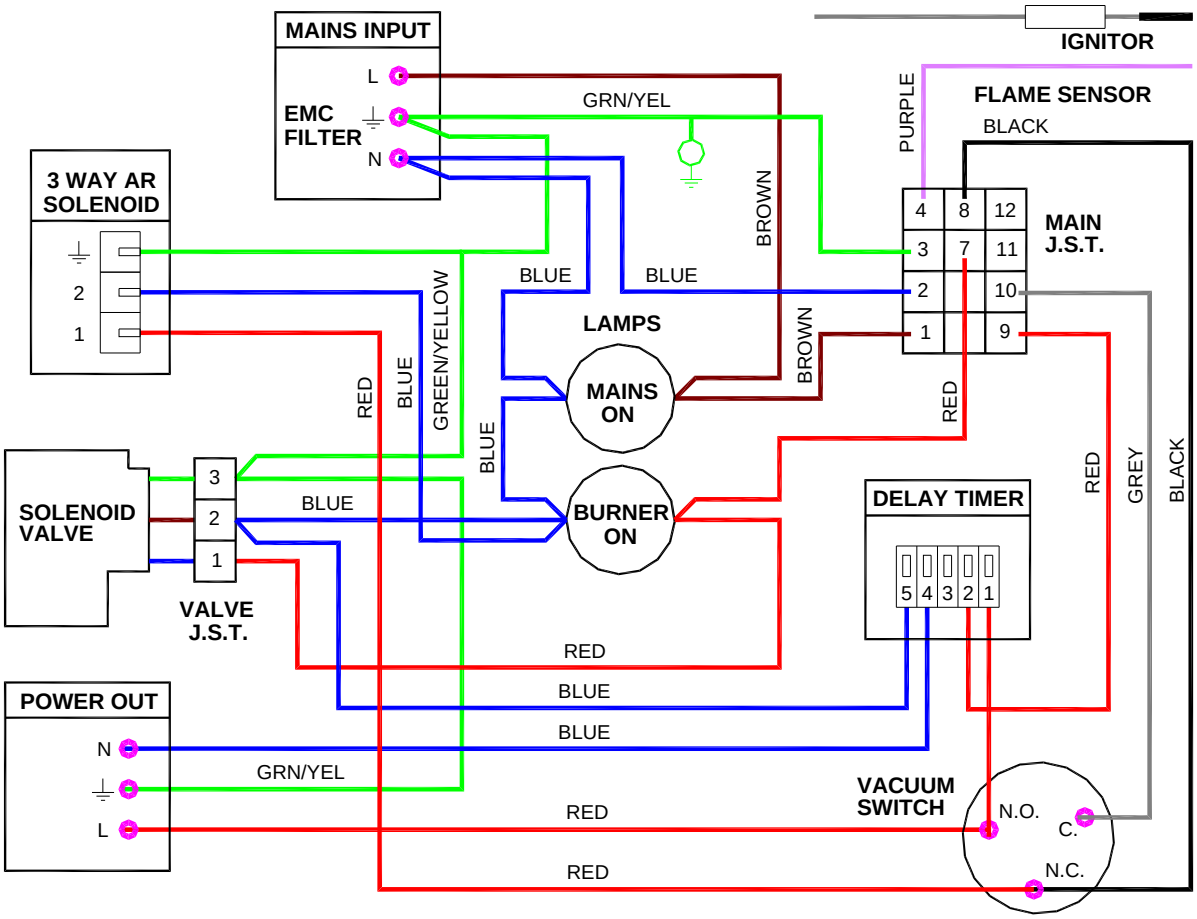

Figure 4.h. LR internal wiring diagram - End Vent Burner c/w valve & N/O or N/C VF Lockout contacts

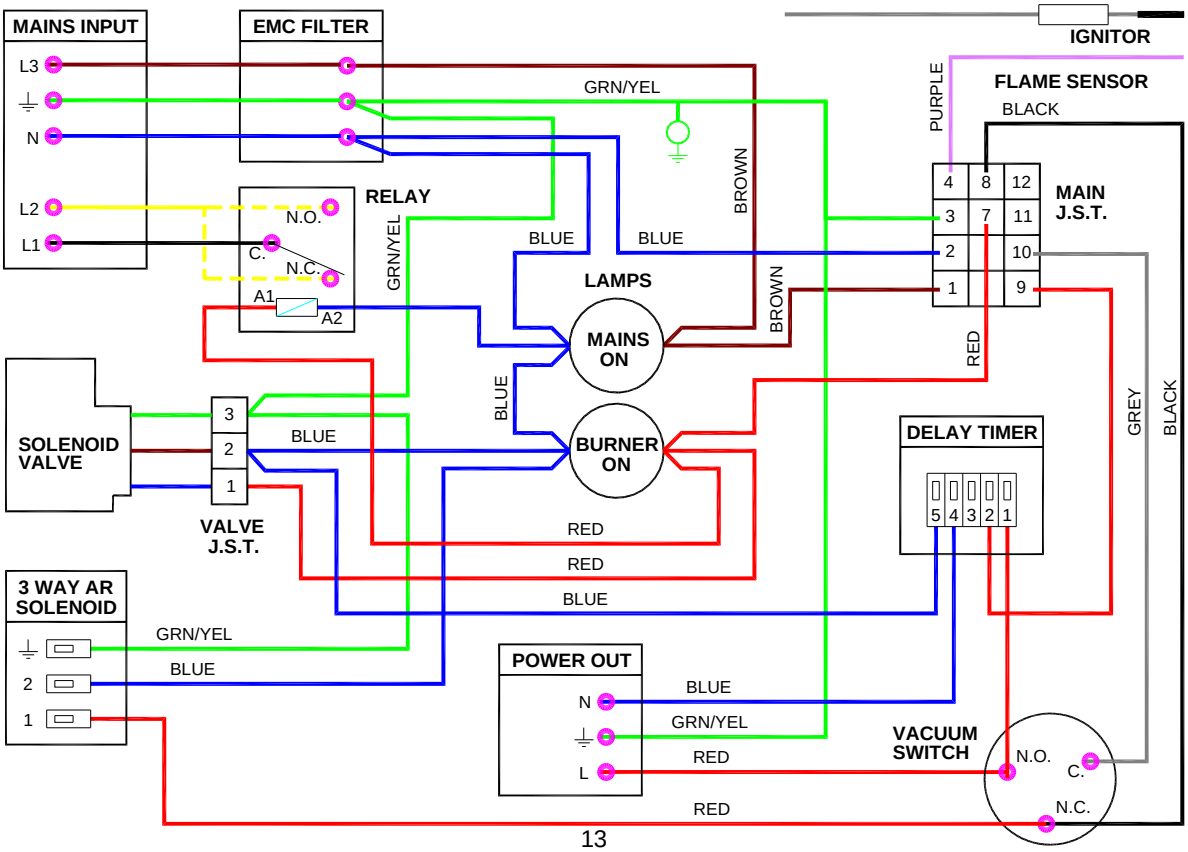

Figure 4.j. NRV Inverter Internal Wiring Diagram for B80, B160 and B300 three phase fans

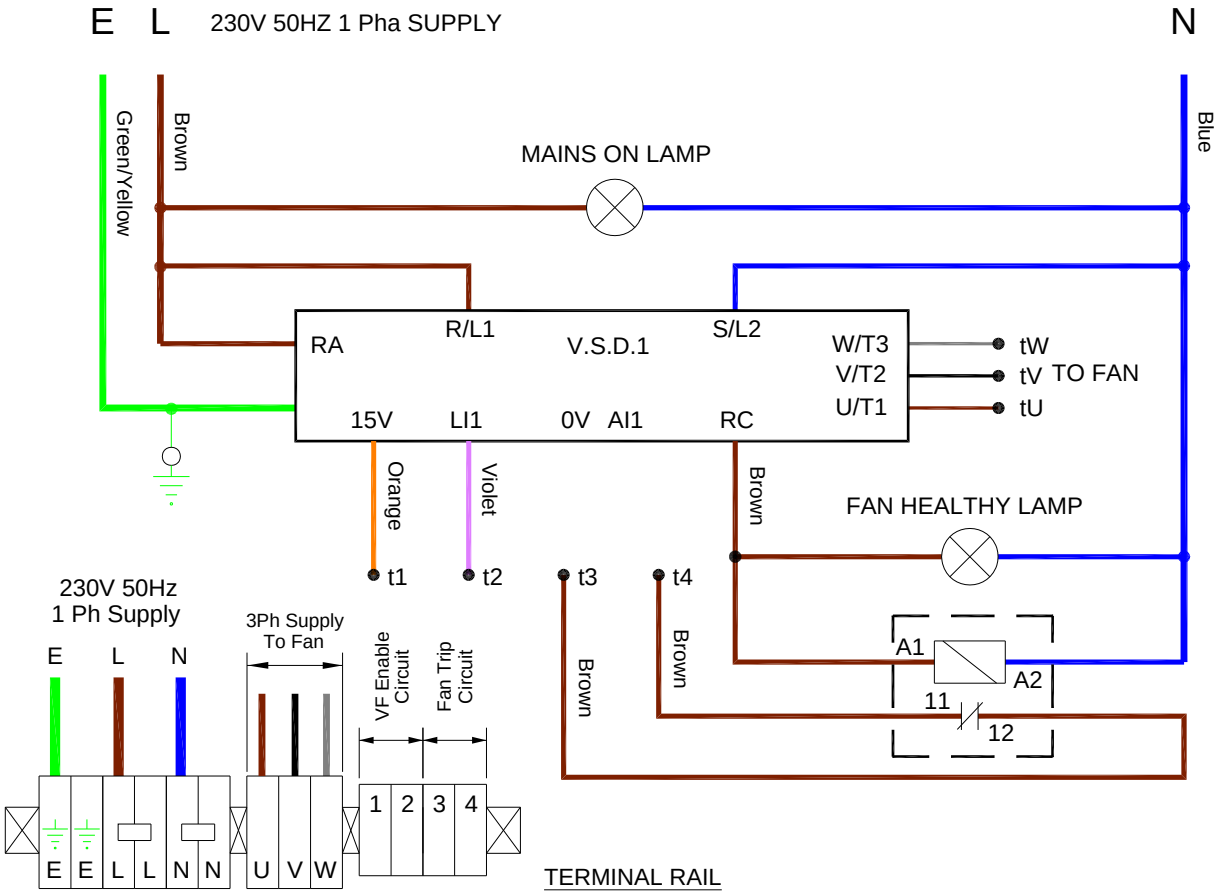

Figure 4.k. NRV Local Relay Unit Internal Wiring Diagram for BH300 three phase fans

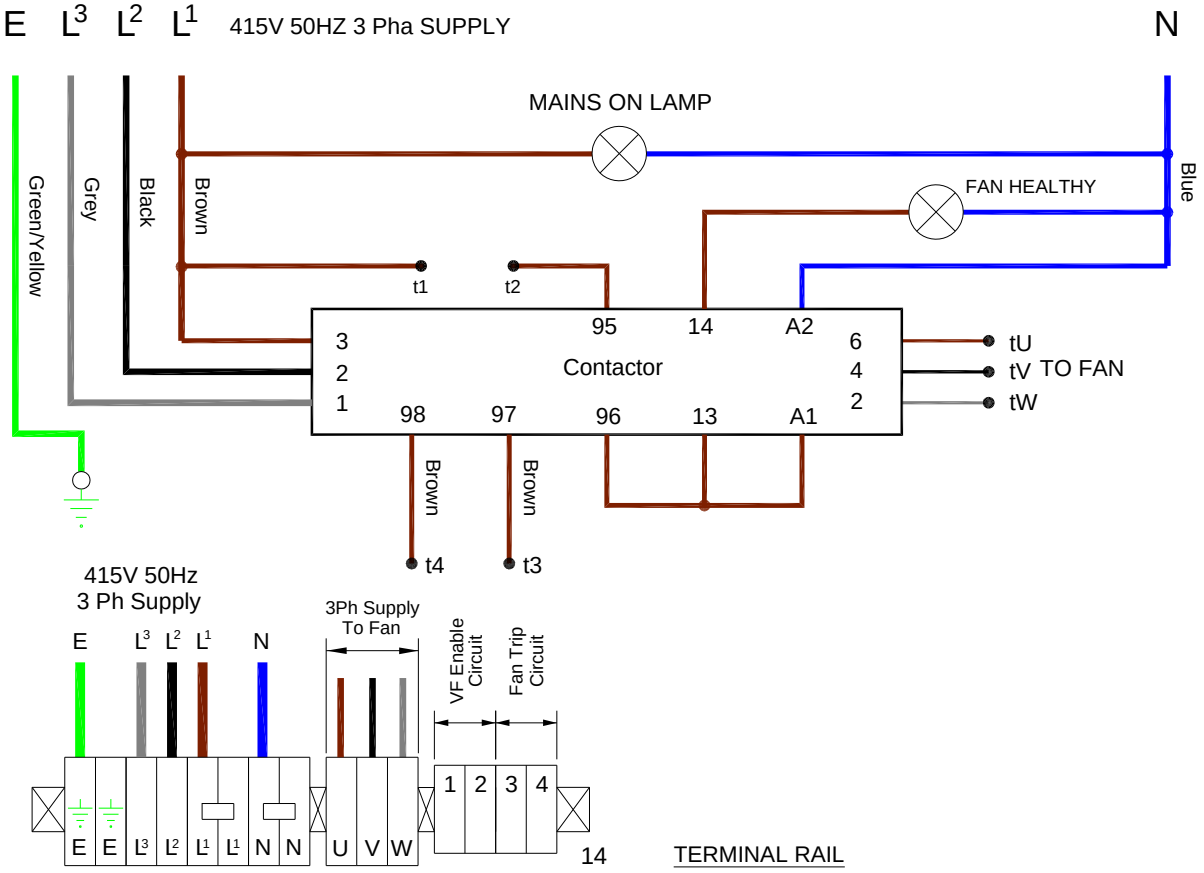

Figure 4.I. NRV Schematic interconnecting wiring. B80, B160 and B300 three phase fans controlled by SmartCom3 via single phase Inverter panel. (single zone shown)

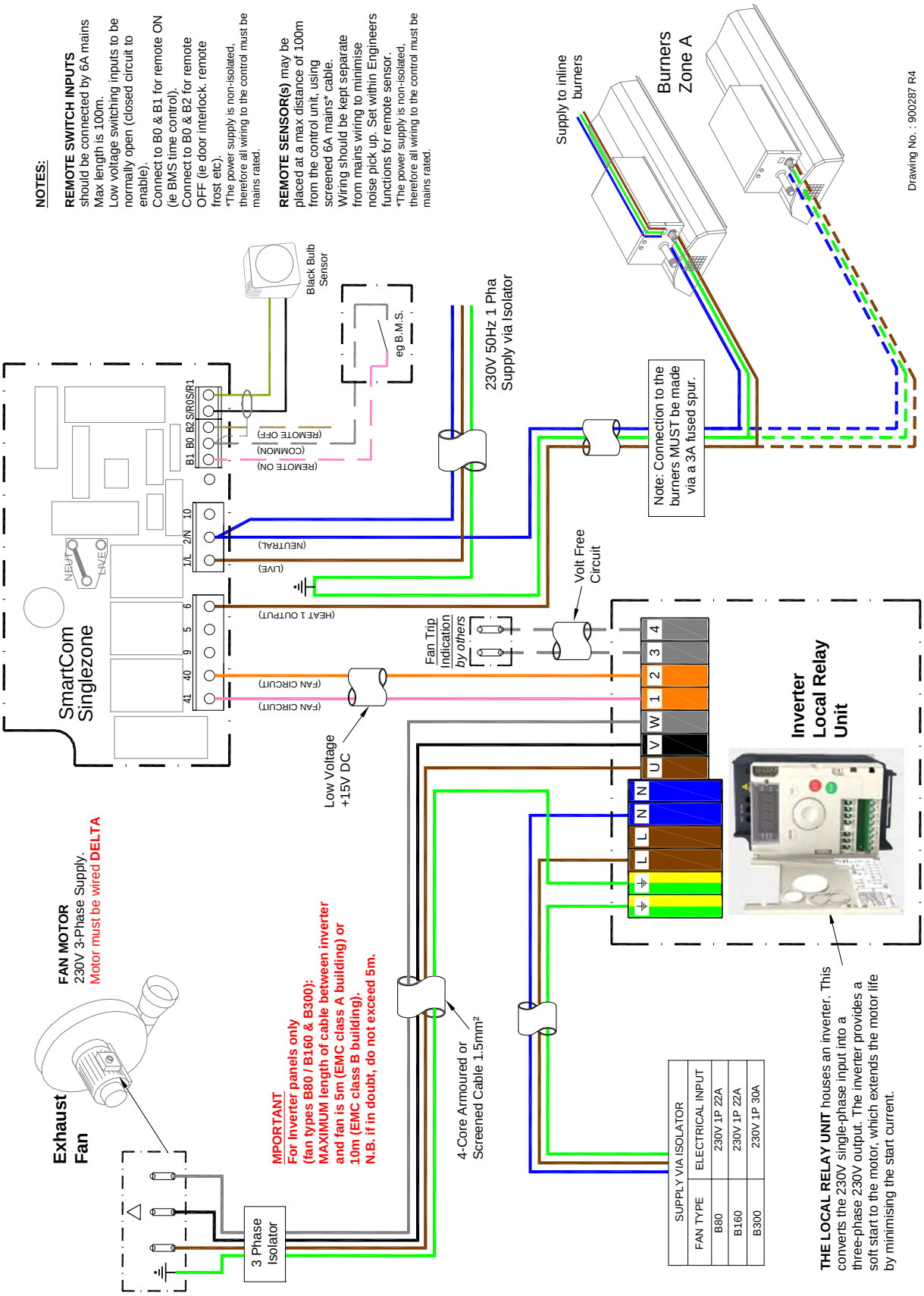

Figure 4.m. NRV Schematic interconnecting wiring. BH300 three phase fans controlled by SmartCom3 via three phase Local Relay panel. (single zone shown)

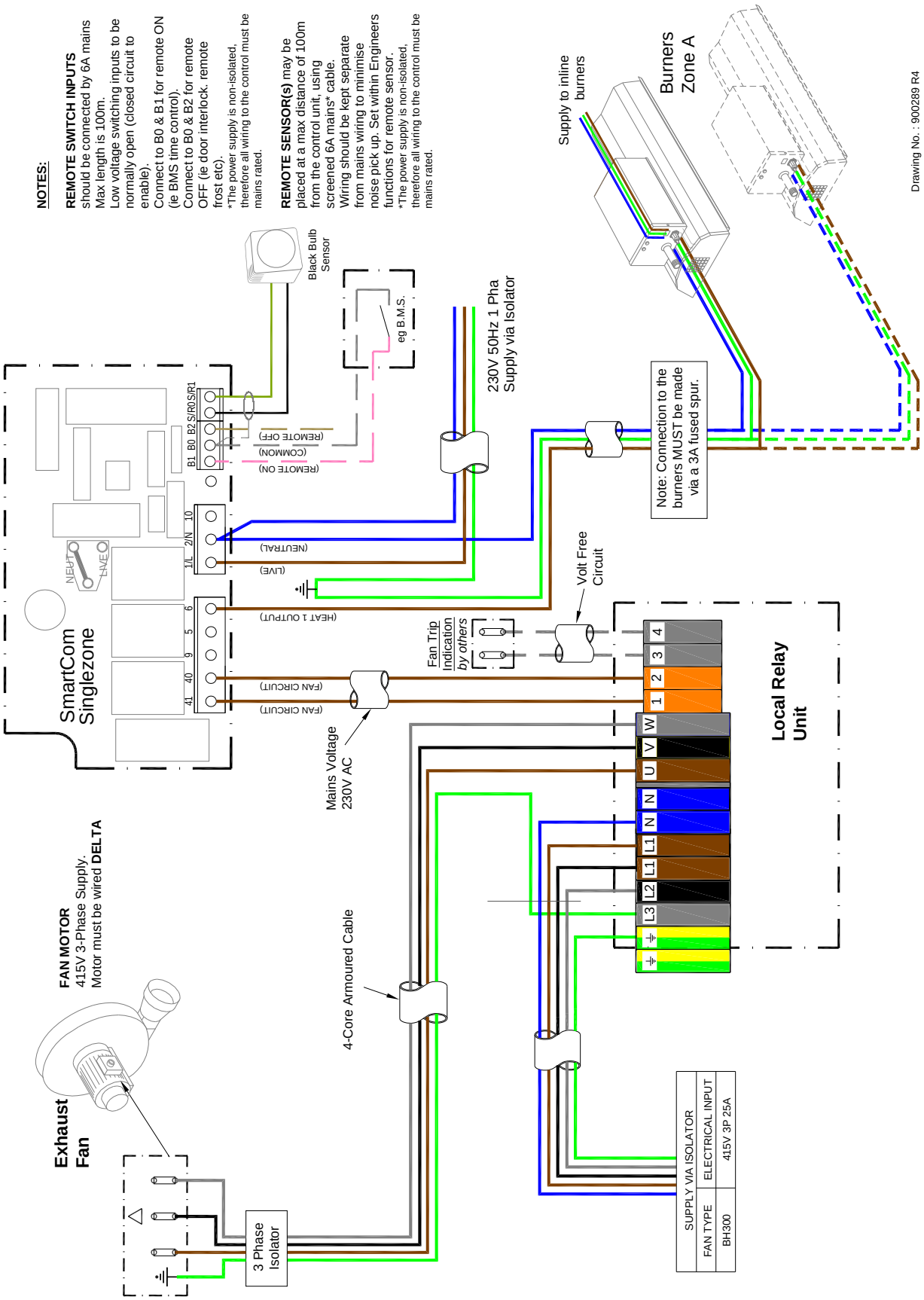

Figure 4.n. NRV Schematic interconnecting wiring. B80, B160 and B300 three phase fans controlled by SmartCom3 via single phase Inverter panel. Zonal BMS Lockout and VF interface.

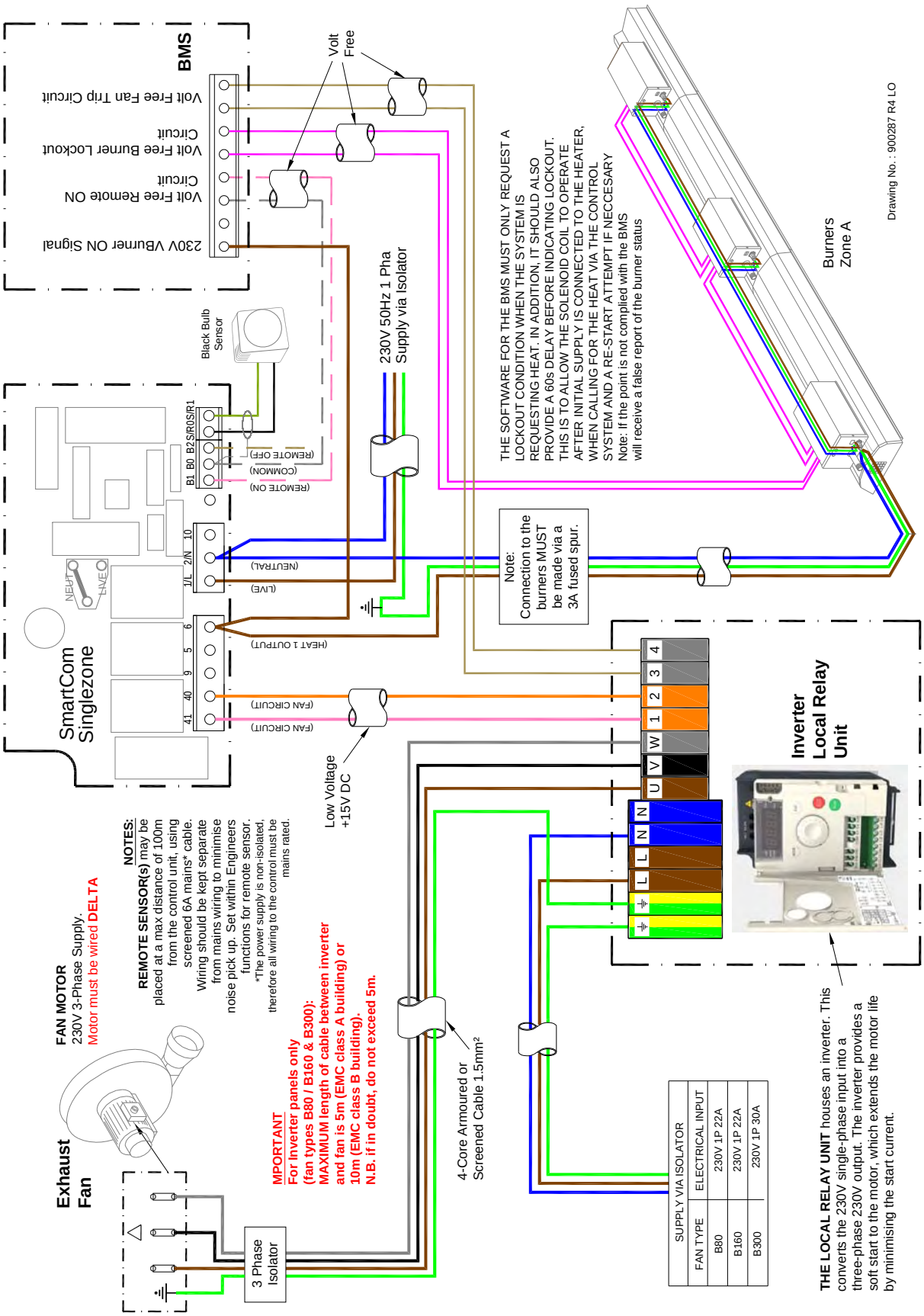

Figure 4.p. NRV Schematic interconnecting wiring. B80, B160 and B300 three phase fans controlled by SmartCom3 via Inverter panel. Individual BMS burner Lockout and VF interface.

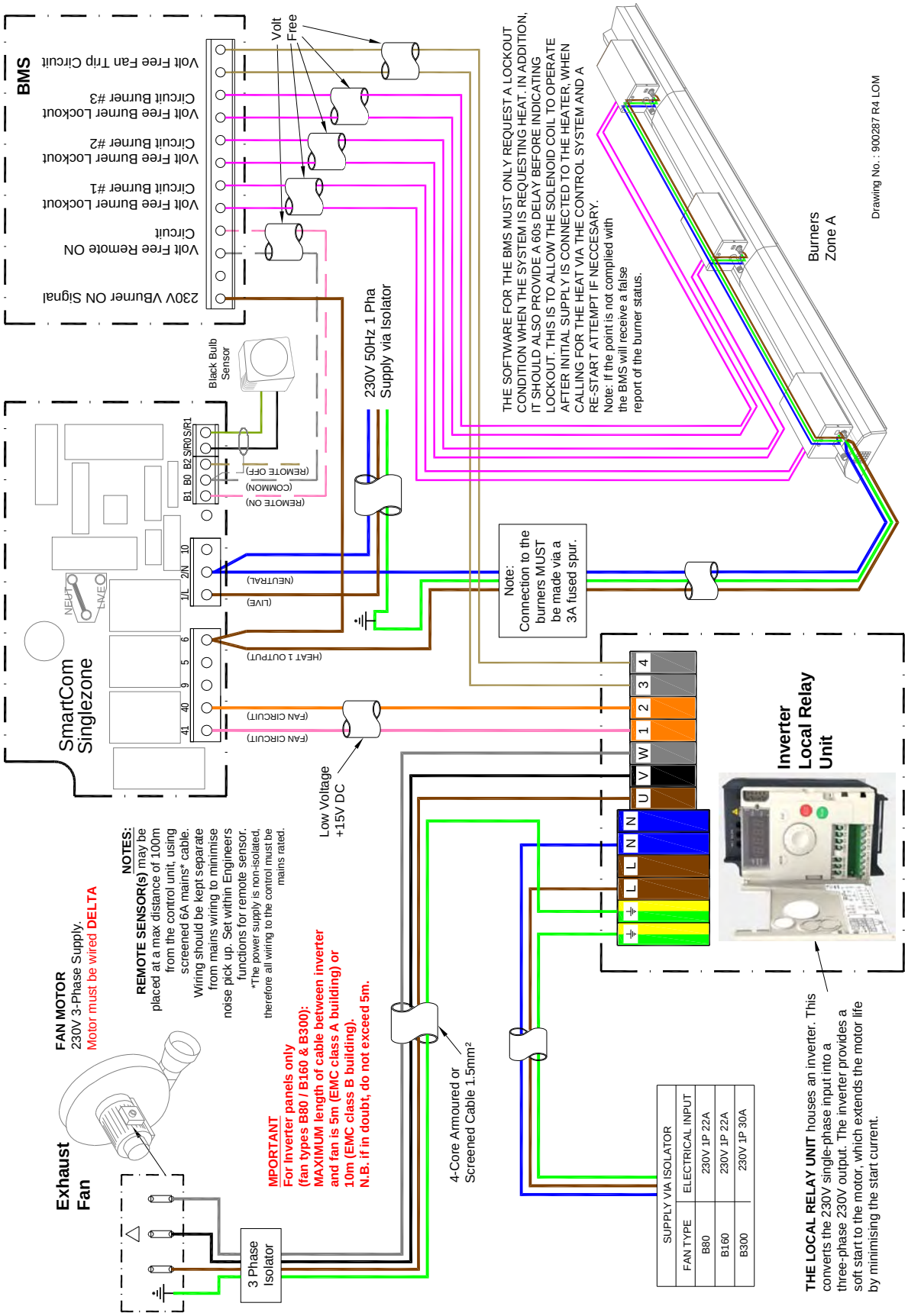

1.7 Ventilation Requirements

Nor-Ray-Vac heaters are installed as flued appliances in accordance with the relevant national requirements in the country of installation.

In buildings having an air change rate of less than 0.5 per hour, additional ventilation is required. For detailed information, please see BS6896 section 5.2.2.2.1

Natural Ventilation
Low level ventilation openings with a free area of at least 2cm²/kW shall be provided. See BS6896 section 5.2.2.2.2.1.

1.8 Exhaust and Air Inlet - Options

1.8.1 Horizontal discharge

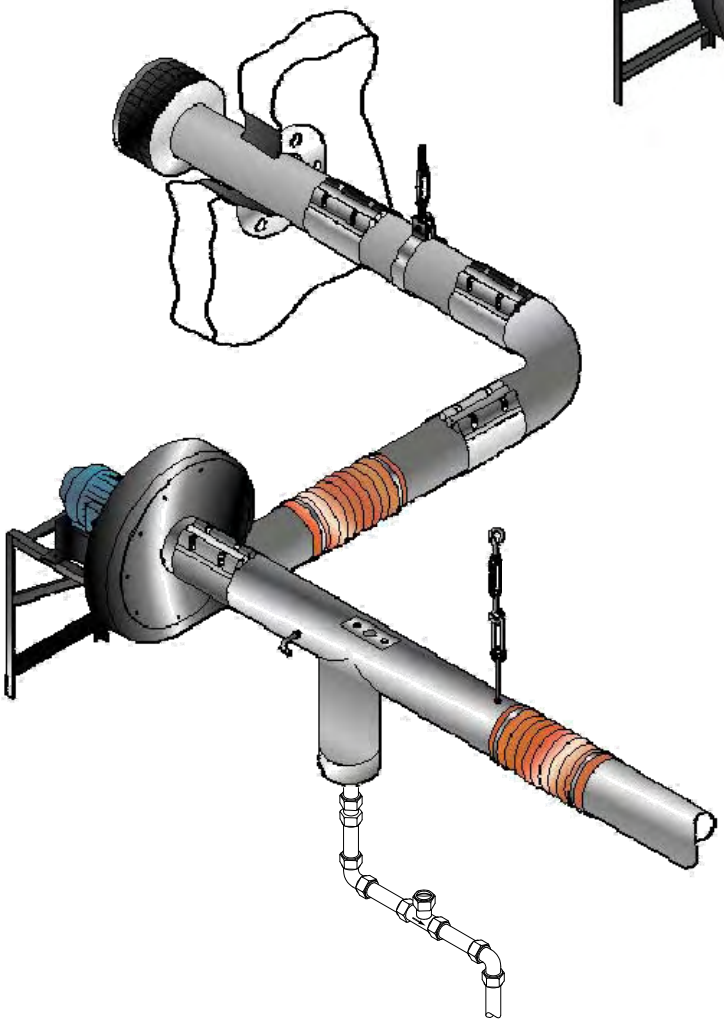

1.8.2 Vertical discharge

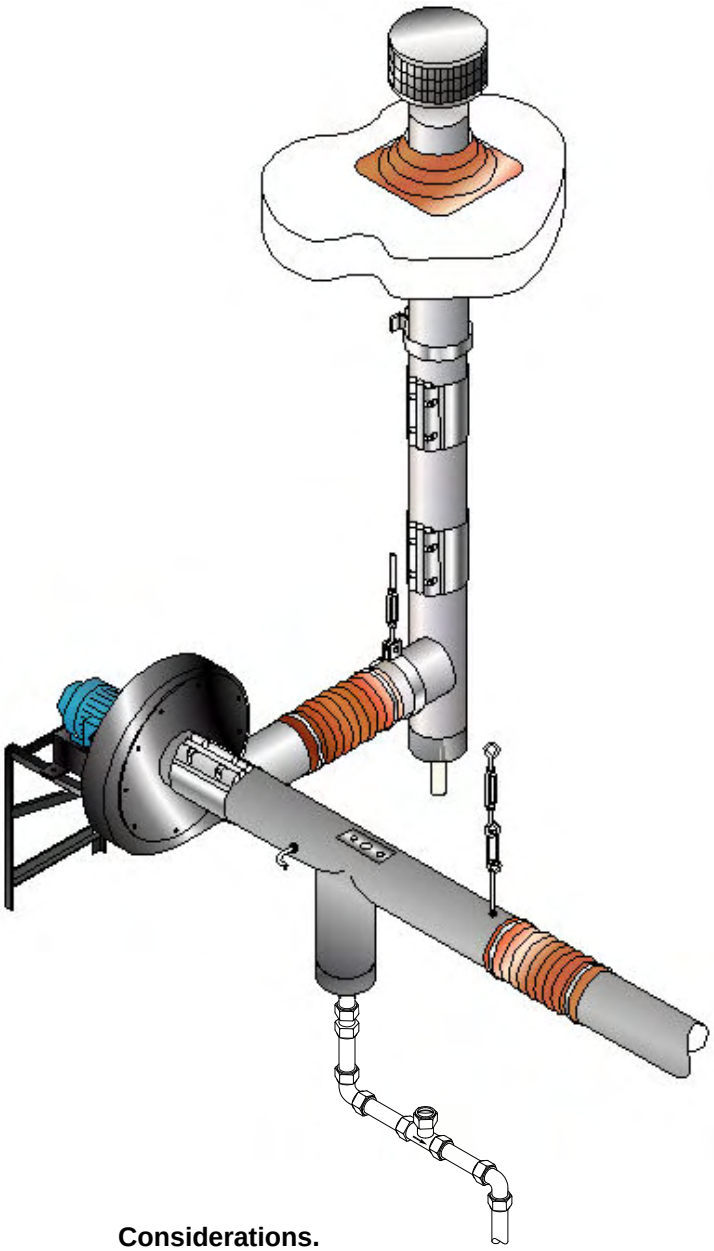

Considerations.

The vacuum fan must be located as shown in the layout drawing.

The vacuum fan must have a bottom horizontal discharge.

The fan should be fitted to the mounting platform which is fixed to the wall or building structure. Alternatively, the fan can be suspended from the roof structure, via drop rods (not supplied) and mounted on base frame. (Anti-vibration mountings are fitted between the fan and the mounting platform/base frame.

For full details of parts and installation, please refer to section 2.9.3

1.8.3 Ducted Air Inlet Considerations.

Heat resistant flexible tube is connected to the burner assembly ducted air adaptor and the EVM ducted air adaptor and connected to the air supply duct

The maximum length of 100mm diameter ductwork is 2m.

Ensure that the flexible supply duct does not drape over or touch the reflector.

Ensure that the flexible ductwork is installed to allow for expansion of the heating system.

On a header duct, the main air supply header which is feeding the individual branch ducts and burner/end vent supply ducts must have a maximum pressure drop of 0.25 mbar (0.1in wg).

All joints and seams in the air supply system must be made air tight and a bird screen used at the inlet.

For full details refer to section 2.13

Figure 5.a. Header Duct Connection

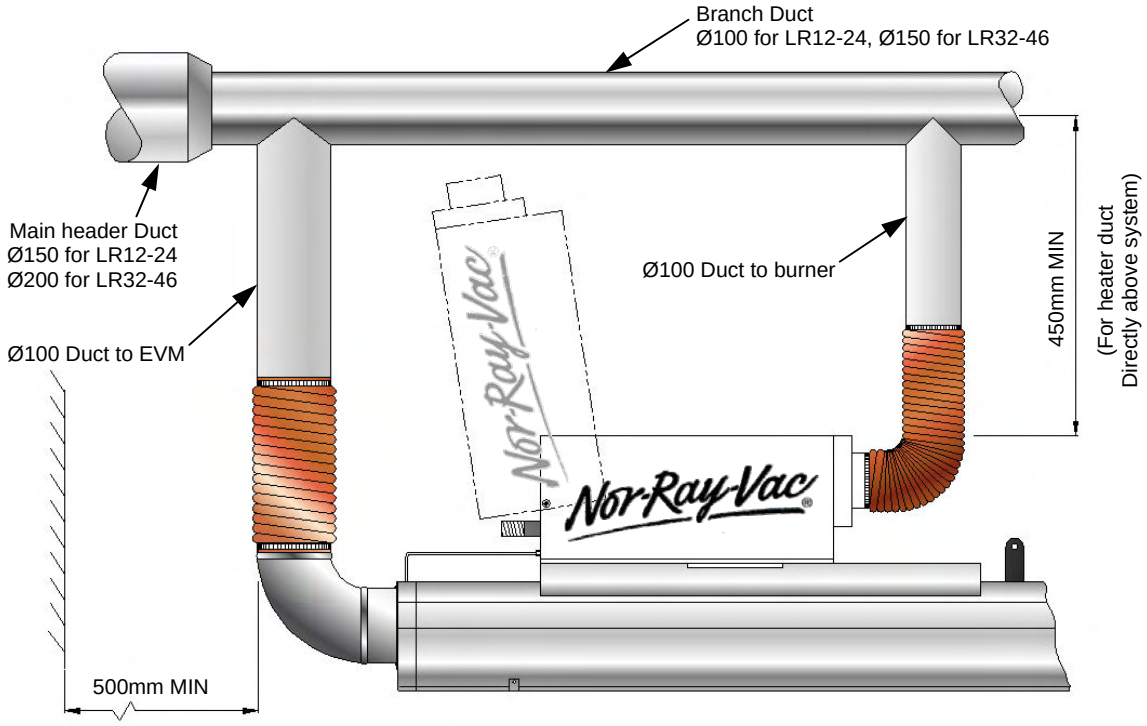

Figure 5.b.
End Vent Ducted
Air Inlet Connection

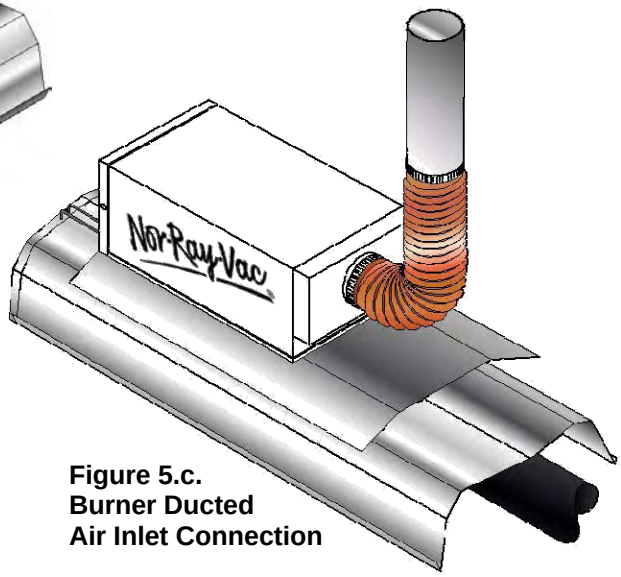

Figure 5.c.
Burner Ducted
Air Inlet Connection

1.9 Vacuum fan mounting details (Type ‘B160’ fan illustrated)

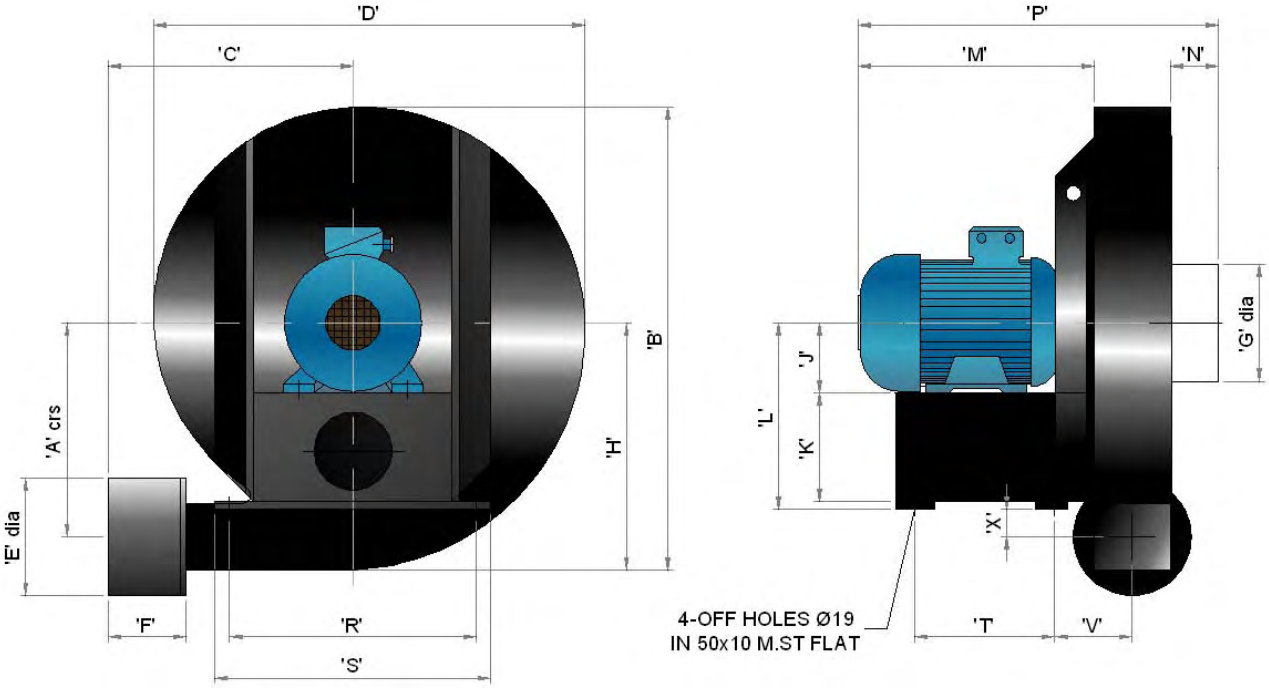

Fan Size	B80	B160	B300	BH300
A (crs)	216	276	286	324
B	595	595	625	704
C	305	308	330	352
D	580	555	575	650
E (Ø)	150	152	152	152
F	50	97	50	50
G (Ø)	150	150	150	148
H	295	318	340	380
J	80	90	90	110
K	150	140	140	120
L	240	240	240	240
M	309	303	341	404
N	50	62	157	157
P	421	463	616	680
R (crs)	318	318	318	318
S (crs)	356	356	356	356
T	204	204	204	204
V	115	115	115	115
X	21	36	46	84

1.10 Technical Details.

Tables 4a & b Burner Details

No of Injectors	1
Gas Connection	½ in BSP Internal thread
Burner current	0.05 (per burner)
Electrical Voltage/Ph/Hz	230 volt 1 phase 50Hz

	Burner Type		**12LR**	**18LR**	**24LR**	**32LR**	**38LR**	**46LR**
Burner Details								
G20 Natural Gas	Gas Category							II
	Heat input (Gross)	kW	12	18	24	32	38	46
	Gas consum rate Nat Gas G20	m³/h	1.14	1.72	2.29	3.05	3.62	4.38
	Max Inlet pressure Nat Gas G20	mbar						50
	Min Inlet Pressure Nat Gas G20	mbar						17.5
	Hs Nat Gas G20	MJ/m³						37.78
	Hi Nat Gas G20	MJ/m³						34.02
	d Nat Gas G20							0.555
	Ws Nat Gas G20	MJ/m³						50.72
	Wi Nat Gas G20	MJ/m³						45.67
	Injector size Nat Gas G20	mm	3.6	4.4	4.9	5.4	5.8	6.3
	Injector Part No.		L100336	L100544	L100549	L100554	L100558	L100563
	Air shutter size Nat Gas G20	mm	13	17	19.5	22.0	24.0	26.5
	Air shutter Part No.		L100322	L100321	L100320	L100314	L100316	L100318
G25 Natural Gas	Gas Category							II
	Heat input (Gross)	kW	12	18	24	32	38	46
	Gas consum rate Nat Gas G25	m³/h	1.33	1.99	2.66	3.55	4.21	5.10
	Max Inlet pressure Nat Gas G25	mbar						50
	Min Inlet Pressure Nat Gas G25	mbar						20
	Hs Nat Gas G25	MJ/m³						32.49
	Hi Nat Gas G25	MJ/m³						29.25
	d Nat Gas G25							0.612
	Ws Nat Gas G25	MJ/m³						41.52
	Wi Nat Gas G25	MJ/m³						37.38
	Injector size Nat Gas G25	mm	3.7	4.6	5.2	5.8	6.3	6.9
	Injector Part No.		L100537	L100546	L100552	L100558	L100563	L100569
	Air shutter size Nat Gas G25	mm	13	17	19.5	22.0	24.0	26.5
	Air shutter Part No.		L100322	L100321	L100320	L100314	L100316	L100318

Tables 4c & d Burner Details

	Burner Type		12LR	18LR	24LR	32LR	38LR	46LR
Burner Details								
G30 Butane Gas	Gas Category		III					
	Heat input (Gross)	kW	12	18	24	32	38	46
	Gas consum rate Butane G30	m³/h	0.34	0.52	0.69	0.92	1.09	1.32
	Max Inlet pressure Butane G30	mbar	35					
	Min Inlet Pressure Butane G30	mbar	20					
	Hs Butane G30	MJ/m³	125.81					
	Hi Butane G30	MJ/m³	116.09					
	d Butane G30		2.075					
	Ws Butane G30	MJ/m³	87.33					
	Wi Butane G30	MJ/m³	80.58					
	Injector size Butane G30	mm	2.6	3.2	3.7	4.2	4.6	5.1
	Injector Part No.		L100526	L100532	L100537	L100542	L100546	L100551
	Air shutter size Butane G30	mm	13	17	19.5	22.0	24.0	26.5
	Air shutter Part No.		L100322	L100321	L100320	L100314	L100316	L100318
G31 Propane Gas	Gas Category		III					
	Heat input (Gross)	kW	12	18	24	32	38	46
	Gas consum rate Propane G31	m³/h	0.45	0.68	0.90	1.21	1.43	1.73
	Max Inlet pressure Propane G31	mbar	57.5					
	Min Inlet Pressure Propane G31	mbar	25					
	Hs Propane G31	MJ/m³	95.65					
	Hi Propane G31	MJ/m³	88.00					
	d Propane G31		1.55					
	Ws Propane G31	MJ/m³	76.84					
	Wi Propane G31	MJ/m³	70.69					
	Injector size Propane G31	mm	2.9	3.5	4.0	4.4	4.8	5.2
	Injector Part No.		L100529	L100535	L100540	L100544	L100548	L100552
	Air shutter size Propane G31	mm	13	17	19.5	22.0	24.0	26.5
	Air shutter Part No.		L100322	L100321	L100320	L100314	L100316	L100318

Hs = Gross CV
Hi = Net CV
Ws = Wobble number on gross CV
Wi = Wobble number on net CV
d = specific density
Reference gas conditions = dry, 15ºC 1013 mbar

Table 5. Heater Details

Burner Type		12LR	18LR	24LR	32LR	38LR	46LR
Min distance between burners	m	5.2	7.4	9.4	14	18	23
Max distance between burners	m	7.2	10.2	13.1	18	23	27
Min distance between burner and fitting	m	3.6	3.6	5.0	6.0	7.0	8.0
Max tube temp	°C			450			480
Min mounting height	m	3.0	3.6	4.0	4.7	5.3	6.0
Max burners per branch		5	4	3	3	3	3

Table 6. End Vent Module (EVM)

Burner Type		12LR	18LR	24LR	32LR	38LR	46LR
End vent setting (hot) - Multi burner systems	mbar	6.25	6.25	6.25	6.25	6.25	6.25
End vent setting (hot) - SINGLE End Vent burners only	mbar	n/a	n/a	n/a	7.5	8.25	9.25
End vent setting (hot) - THREE burners in a branch	mbar	n/a	n/a	n/a	n/a	n/a	5.6
End Vent orifice diameter	mm	14.5	16	24	27	32	n/a
End Vent orifice Part No.		L104102	L104101	L104100	L104093	L104092	n/a

Table 7.
Burner Dip-switch position

(see section 3.3.1.8)		Number (qty) of burners in-line				
		1	**2**	**3**	**4**	**5**
Burner Number (within each radiant branch - lowest number closest to fan)	1	1	1	1	1	1
	2	-	2	2	2	1
	3	-	-	3	3	2
	4	-	-	-	4	3
	5	-	-	-	-	4

To set dip-switch slide the white switch toward the numbers (1-4)

Table 8. Noise Data

Burner Type		12LR	18LR	24LR	32LR	38LR	46LR
Noise level @ 3m below **In-Line BURNER**	db(A)	46	47	47	48	50	51
	NR±2	40	41	41	42	44	45
Noise level @ 3m below **EVM Burner**	db(A)	46	48	48	52	55	58
	NR±2	40	42	42	46	49	52
Noise level @ 3m below **EVM with silencer**	db(A)	44	45	45	48	51	53
	NR±2	38	39	39	42	45	47
Noise level @ 3m below **EVM Burner with Ducted Air**	db(A)	tba	tba	tba	tba	tba	tba
	NR±2	tba	tba	tba	tba	tba	tba

Table 9. Fan Details

	Fan Size	B80	B160	B300	BH300
Fan part number		201760	201761	201732	201763
Motor (TEE)		QS 80M2B H	QS 90S2A-40H	QS 90L2A H	QS 112M2A H
Power	kW	1.1	1.5	2.2	4.0
Supply to Fan	V/Hz/P	230~50/3	230~50/3	230~50/3	400~50/3
Run Current	A	4.38	5.6	8.48	7.2
Start Current	A	n/a	n/a	n/a	54.0
Speed	RPM	2850	2860	2480	2880
Wired		Δ	Δ	Δ	⅄
Flow rate @ 20°C	m³/h	368	736	1380	1380
Flow rate @ 150°C	m³/h	259	519	972	972
Pressure	mbar	29	29	29	42
Max Operating Temp.	°C	200	200	200	200
Weight	kg	45	52	58	75

Table 10. Local Relay Unit

	Fan Size	B80	B160	B300	BH300
LRU part number		900274	900088	900089	900282
Inverter type	kW	1.5	1.5	2.2	n/a
Supply to LRU	V/Hz/P	230~50/1	230~50/1	230~50/1	400~50/3
Line Current	A	14.8	14.8	20.8	n/a
Motor Current	A	4.2	5.6	7.8	7.2
Fuse Rating	A	22	22	30	n/a
Acceleration Time	s	25	25	25	n/a
Deceleration Time	s	25	25	25	n/a

Table 11. System Weights

	Burner Type	12LR	18LR	24LR	32LR	38LR	46LR
LR Burner	kg						8.3
Radiant branch*	kg/m						8.3
Radiant branch + Slimline grille*	kg/m						10.9
Radiant branch + Protective guard*	kg/m						10.0
4” Mild steel tail pipe	kg/m						5.5
4” Aluminum tail pipe	kg/m						0.9
6” Mild steel tail pipe	kg/m						10.6
6” Aluminium tail pipe	kg/m						1.3
Max / susp point @ EV position	kg						24.2

** without burners or ducted air systems*

2. Assembly Instructions.

***PLEASE READ** this section prior to assembly to familiarise yourself with the components and tools you require at the various stages of assembly. Carefully open the packaging and check the contents against the parts and check list.*

The manufacturer reserves the right to alter specifications without prior notice.

Please ensure that all packaging is disposed of in a safe environmentally friendly way.

For your own safety we recommend the use of safety boots and leather faced gloves when handling sharp or heavy items. The use of protective eye wear is also recommended.

2.1 Tools Required.

The following tools and equipment are advisable to complete the tasks laid out in this manual.

Suitable alternative tools may be used.


Trestles


Leather Faced Gloves


Pozidrive Screwdriver


10mm, 12mm & 13mm Spanners


Wrench With Extension


13mm Socket


Tape Measure


4 & 5mm Allen Keys


Saw


Pop Riveter & 3/16" Rivets


Silicone Sealant & Gun

2.2 Assembly Notes.

Please read these assembly notes in conjunction with the correct assembly drawings (Sections 2.2.1 to 2.21.1)

The system is assembled at high level suspended by chains from first fixings to the roof structure.
(First fixings by others)

2.2.1 Radiant Tubes

Note: on assembly, tube seams to be facing upwards.

All radiant tubes are 101mm (4") O/D, ERW steel to BS 6323:Part 5: are factory pre-painted and supplied in 5.2m lengths.
These may need to be cut depending on the system drawing design.

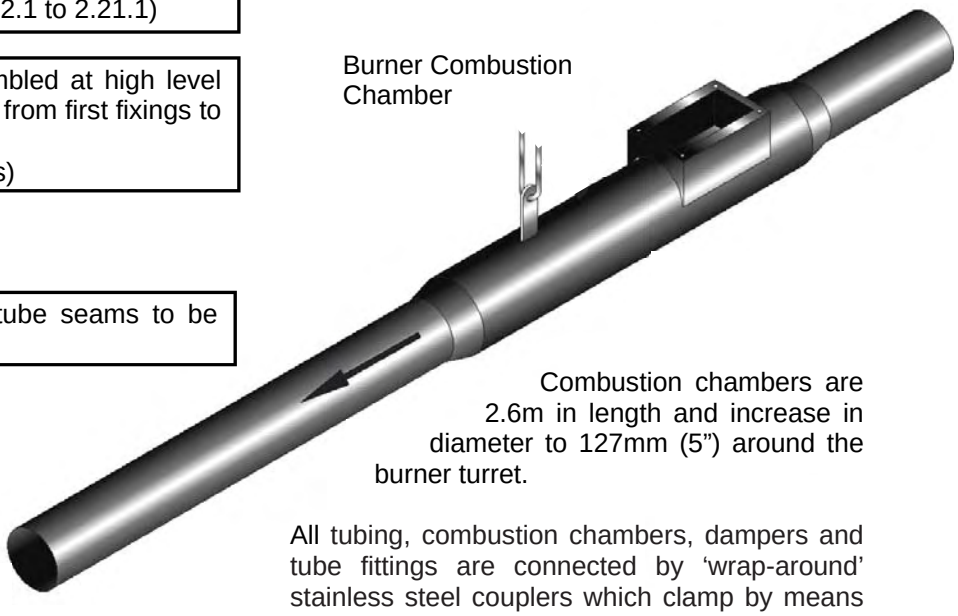

Combustion chambers are 2.6m in length and increase in diameter to 127mm (5") around the burner turret.

All tubing, combustion chambers, dampers and tube fittings are connected by 'wrap-around' stainless steel couplers which clamp by means of two high tensile stainless steel set pins. (See section 2.2.2)

2.2.2 Couplers

The Nor-Ray-Vac Tube Coupler is a screw tightening, self aligning - positive located tubular coupler. Manufactured in a non–corrosive stainless steel it is available in both 100mm (4”) and 150mm (6”).

Two high tensile stainless steel set pins tighten to clamp the coupler onto the tube whilst a rivet provides a centralised permanent stop to give the joint equidistance.

The following procedure explains the correct method of assembly:

Before assembly, carefully loosen the two screws. Position the coupler onto the first tube ensuring that the bars are positioned uppermost.

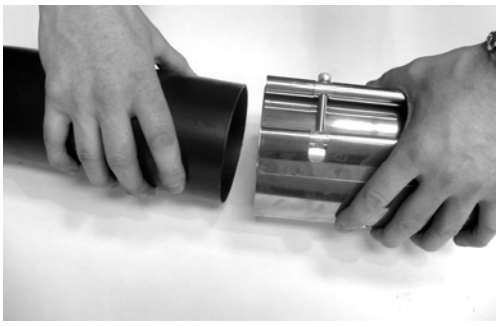

Slide the coupler over the tube ensuring that the rivet stop has butted up to the tube end.

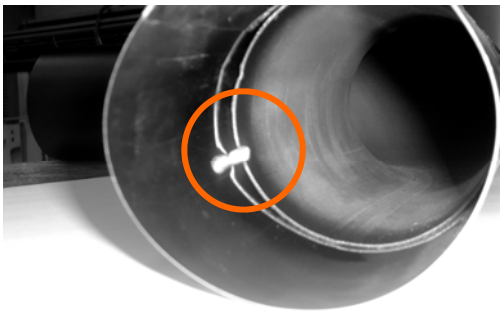

Using a 6mm allen key, tighten the relevant pin. DO NOT OVERTIGHTEN.

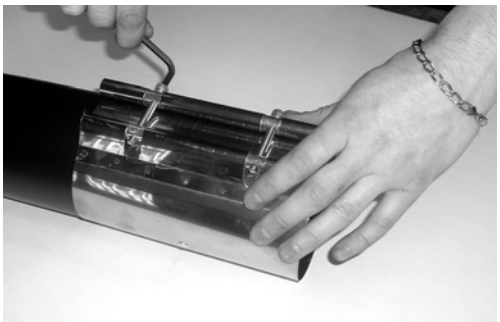

Slide the second tube into the coupler ensuring that the rivet stop has butted up to the tube end.

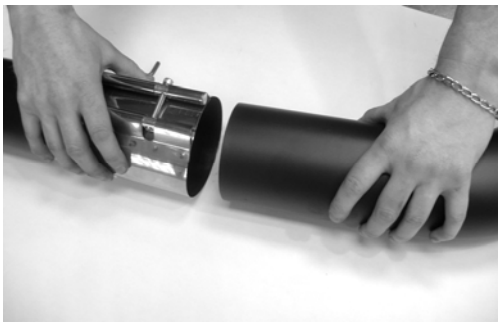

Using the 6mm allen key, tighten the second pin. DO NOT OVERTIGHTEN.

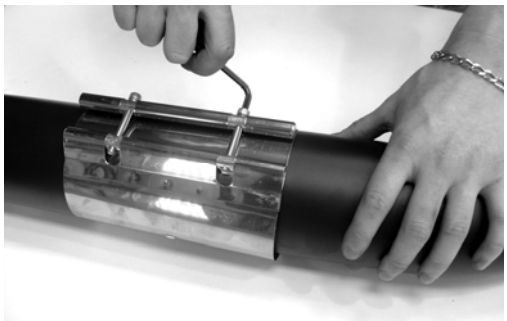

Moving between the two set pins, tighten both ensuring that equal pressure is applied to each set pin in turn.

If all steps have been followed correctly, the coupler should have aligned itself parallel to the two tubes and a slight indentation can be observed. Using the 6mm allen key, finally tighten each screw by a further quarter turn. If a power tool is used, use a torque limit setting of 6.6 lbf/ft (0.91kgf/m) must be achieved.

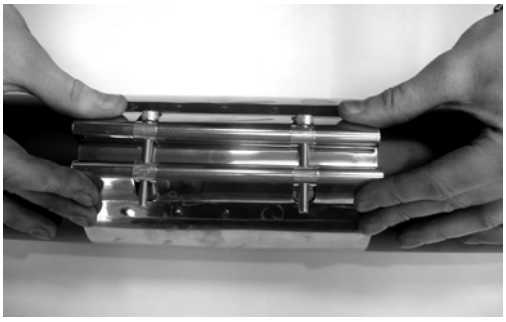

2.2.3 Reflectors

The radiant tube sections of the system are fitted with reflectors made of either stainless steel or aludip to direct infra-red rays downwards.

The reflectors have a unique design profile to maximise the reflected radiant heat, minimise convective loss, and maximise on rigidity.

The reflectors are overlapped and held in position by the reflector bracket assembly.

There are two styles of reflectors:

2.2.3.1 Standard Reflectors

These 2.4m long reflectors are positioned above the tube to radiate the heat downwards and are fixed to the radiant tube via a reflector bracket (see section 2.5). The combustion chamber reflector has a rectangular hole and slot, pre cut to allow for burner combustion chamber and support lug fitting.

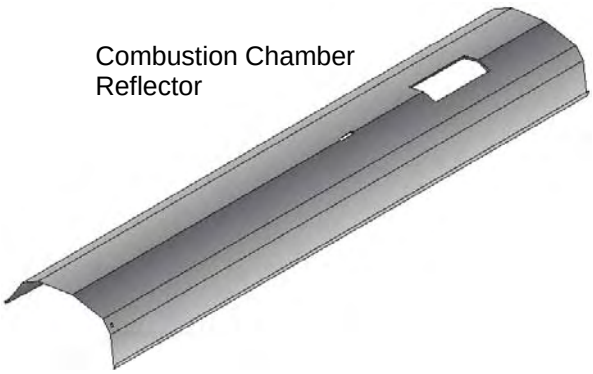

2.2.3.2 Perimeter Reflectors

Perimeter reflectors are used when the radiant tube is mounted at the perimeter of the building. They have the same profile as standard reflectors but extended one side to direct the radiant heat away from the wall.

The perimeter combustion chamber reflectors have a cut-out for the combustion chamber turret and suspension lug at both ends so that the one reflector can be used for either left or right hand perimeter systems.

> ! Note: when overlapping the perimeter combustion chamber reflector, extra overlap is required to cover the pre-cut holes and slot.

2.2.3.3 Corner Reflectors

Used where radiant tubes are joined with a 90° bend. The corner reflector comes in two pieces and is assembled on-site.

Corner Reflector

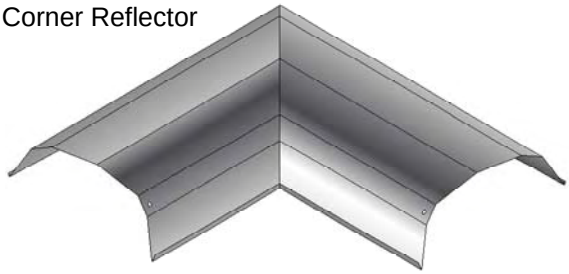

2.2.3.4 Tee piece Reflectors

Used where a radiant tube connects to another at right angles. The reflector is a special short section with a central tube cut out.

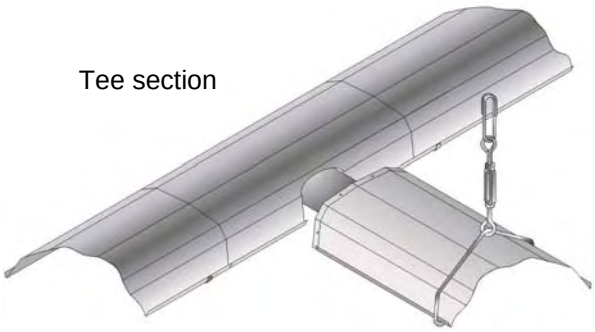

2.2.4 Brackets

There are two styles of brackets:

2.2.4.1 Suspension brackets.

Suspension brackets are made from a one piece construction and are formed to support the tube and reflector alike. The wrap around ends are aligned to hold a turnbuckle eyelet in the correct hanging position.

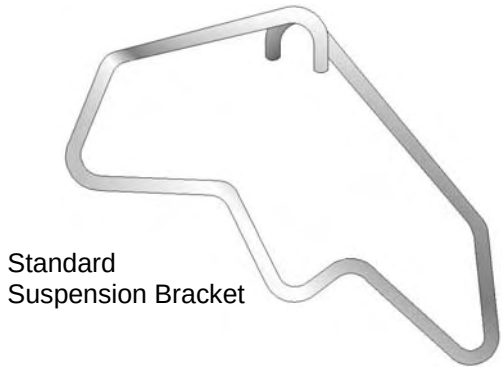

A perimeter suspension bracket is available which has the same profile as the standard brackets but extended one side to accommodate the perimeter reflector.

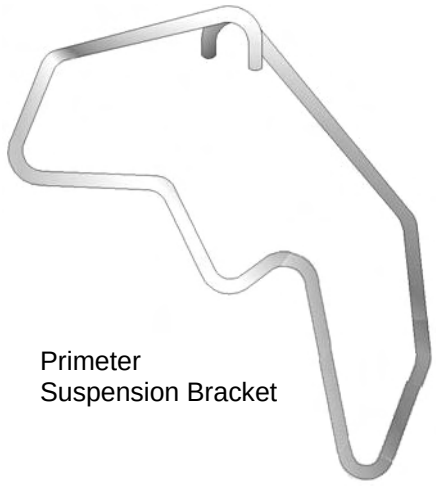

Primeter
Suspension Bracket

2.2.4.2 Reflector Support Bracket

Reflector Support Brackets are a two piece construction. The first half is formed to seat on top of the radiant tube and supports the reflector sides in position. The second part clamps around the bottom half of the tube and is fixed in position via a fastener.

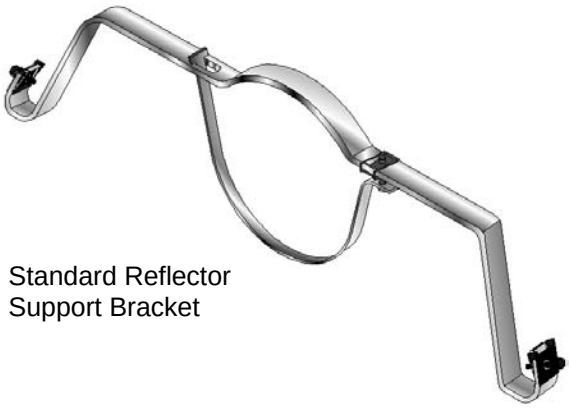

Standard Reflector
Support Bracket

The reflector support bracket has two functions depending on the position of the fixing screws.

1. To fix the reflector into position.
2. To allow the reflector to slide within the bracket for thermal expansion.

A perimeter reflector support bracket is available which has the same profile as the standard brackets but extended one side to accommodate the perimeter reflector.

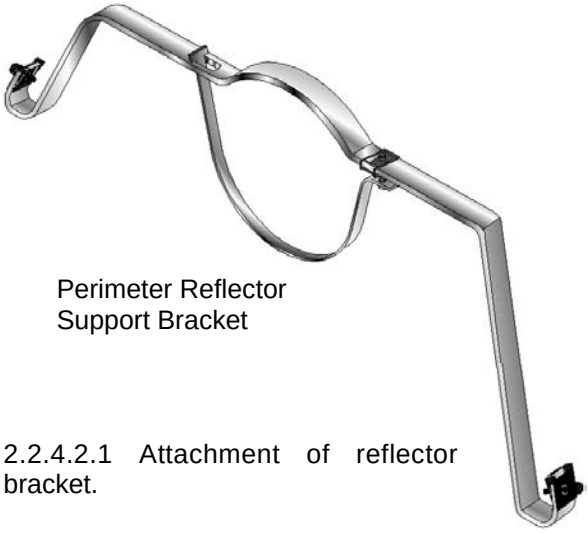

Perimeter Reflector
Support Bracket

2.2.4.2.1 Attachment of reflector bracket.

Fit the reflector bracket (B) around the tube and tighten the set pin (D) to clamp the central clip (C) to the tube.

The set pins (A) positioned at both edges of the bracket (B) are used to provide either a fixed joint or a sliding joint.

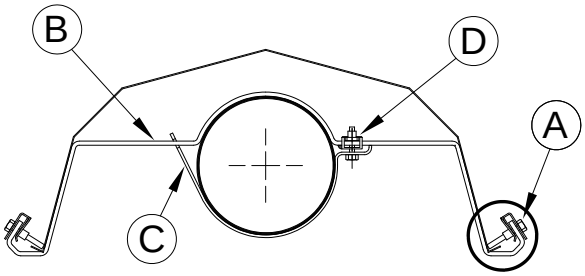

Fully tighten these screws for **fixed joints**.

'Fixed Joint' detail.

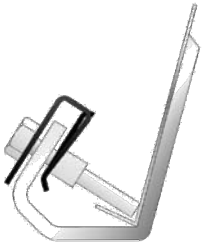

Leave a minimum 3mm gap clearance between reflector and screws for a **sliding joint**.

'Sliding Joint' detail.

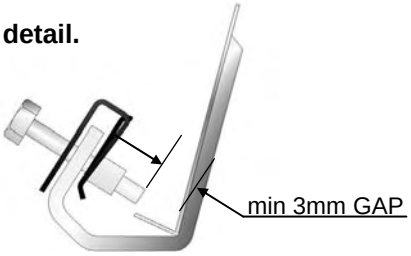

The reflector overlap after each burner must be a 'sliding joint', to allow for thermal expansion.

The next downstream reflector overlap must be a ‘fixed joint’.

This pattern of alternate sliding and fixed joints will continue up to the next in line burner or damper assembly.

A reflector support bracket must be positioned at the end vent and at the damper end of each radiant branch, plus either side of a reflector corner and reflector tee section.

These units must be ‘fixed joints’.

2.2.5 Burner

2.2.5.1 LR Burner Unit

Each burner will consist of:
A burner control housing (BCH) of chassis style with detachable pivoting lid. All control wiring to the burner head is within the BCH, which also contains a combination gas valve comprising of 2 class 2 solenoid valves, dedicated zero governor and filter, a full sequence controller and cassette air filter for primary air supply to the burner. Externally on the BCH, neon lights indicate **mains on** and **burner on** modes.

The air and gas are pre-mixed to stoichiometric proportions within the burner head assembly, prior to being admitted to the point of combustion.

Ignition is by an electric arc forward of the face of the burner head on to the main frame.

LR Burner

2.2.5.2 Burner Head

A burner head assembly of lightweight cast aluminium construction, a ceramic style burner head insert, maintained in position by the flame retention grid. The casting assembly also accommodates the gas jet, air shutter and mixing chamber.

LR Burner head

The ignition and flame sensing electrode assembly is mounted to the casting flange of the burner face.

2.2.6 End Vent Module (EVM)

At the start of each radiant branch an end vent module is connected to the rear of the first combustion chamber. The end vent module externally maintains the lines of the reflector profile.

End Vent Module

To comply with European standards that state air flow must be proven in each radiant branch, the end vent burner incorporates an air pressure switch. The end vent module incorporates the flow sensing pipework carrier air orifice plate and optional silencer box to reduce noise levels.

2.2.7 Vacuum fans

A low noise robust steel plate fabricated centrifugal fan coated with heat and corrosion resistant paint, capable of a static pressure of either 29 mbar or 45 mbar at 20°C and directly coupled to a totally enclosed motor to be fitted at the end of the tube system.

The fan exhausts the products of combustion from the system discharging through an outlet flue pipe to atmosphere external to the building.

The maximum operating temperature is 200°C.

The fan motor is IP55 rated for external use.

Exhaust Fan

2.3 Installation of End Vent Section.

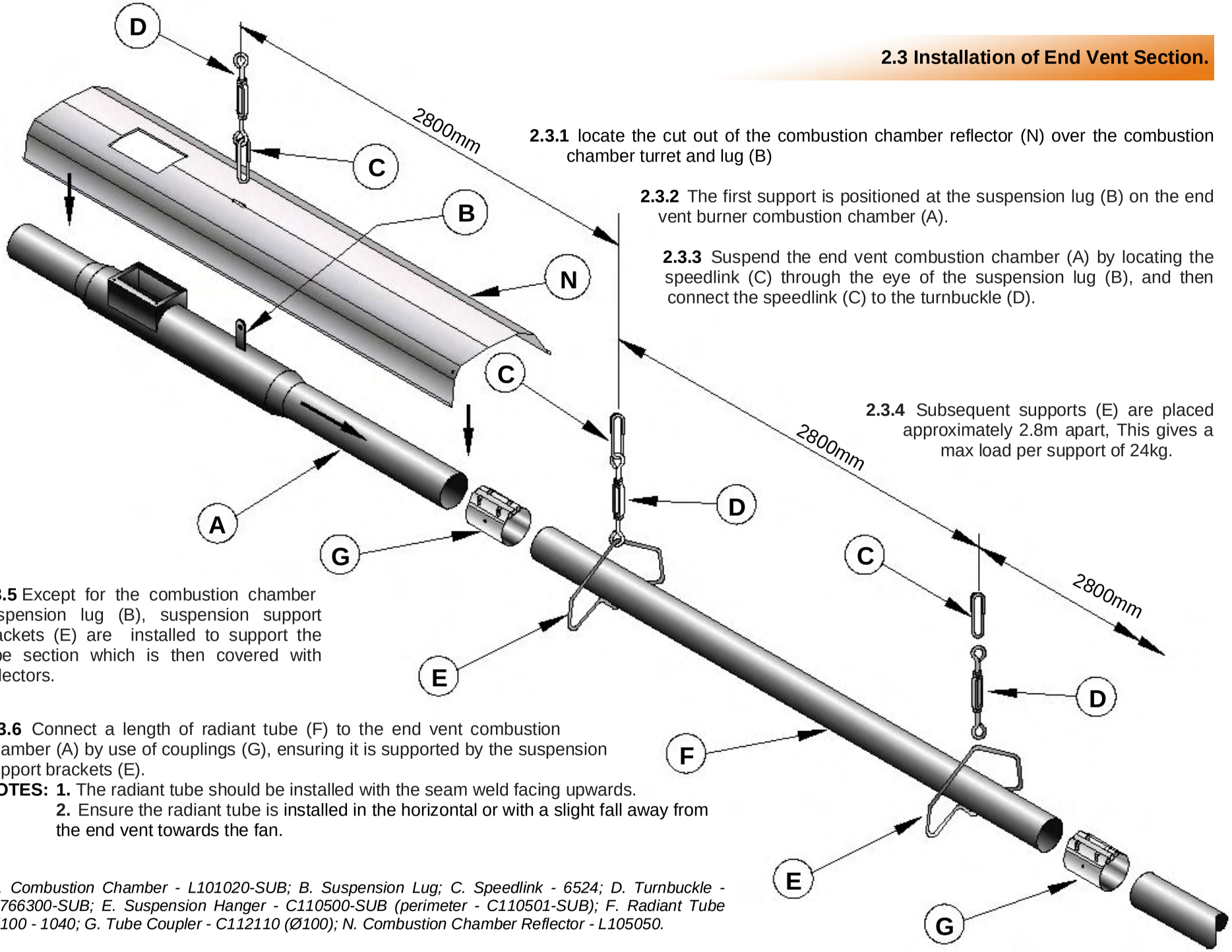

2.3.1 locate the cut out of the combustion chamber reflector (N) over the combustion chamber turret and lug (B)

2.3.2 The first support is positioned at the suspension lug (B) on the end vent burner combustion chamber (A).

2.3.3 Suspend the end vent combustion chamber (A) by locating the speedlink (C) through the eye of the suspension lug (B), and then connect the speedlink (C) to the turnbuckle (D).

2.3.4 Subsequent supports (E) are placed approximately 2.8m apart, This gives a max load per support of 24kg.

2.3.5 Except for the combustion chamber suspension lug (B), suspension support brackets (E) are installed to support the tube section which is then covered with reflectors.

2.3.6 Connect a length of radiant tube (F) to the end vent combustion chamber (A) by use of couplings (G), ensuring it is supported by the suspension support brackets (E).

NOTES: **1.** The radiant tube should be installed with the seam weld facing upwards.
2. Ensure the radiant tube is installed in the horizontal or with a slight fall away from the end vent towards the fan.

A. Combustion Chamber - L101020-SUB; B. Suspension Lug; C. Speedlink - 6524; D. Turnbuckle - C766300-SUB; E. Suspension Hanger - C110500-SUB (perimeter - C110501-SUB); F. Radiant Tube Ø100 - 1040; G. Tube Coupler - C112110 (Ø100); N. Combustion Chamber Reflector - L105050.

Installation of Radiant Tube (In-line Section)

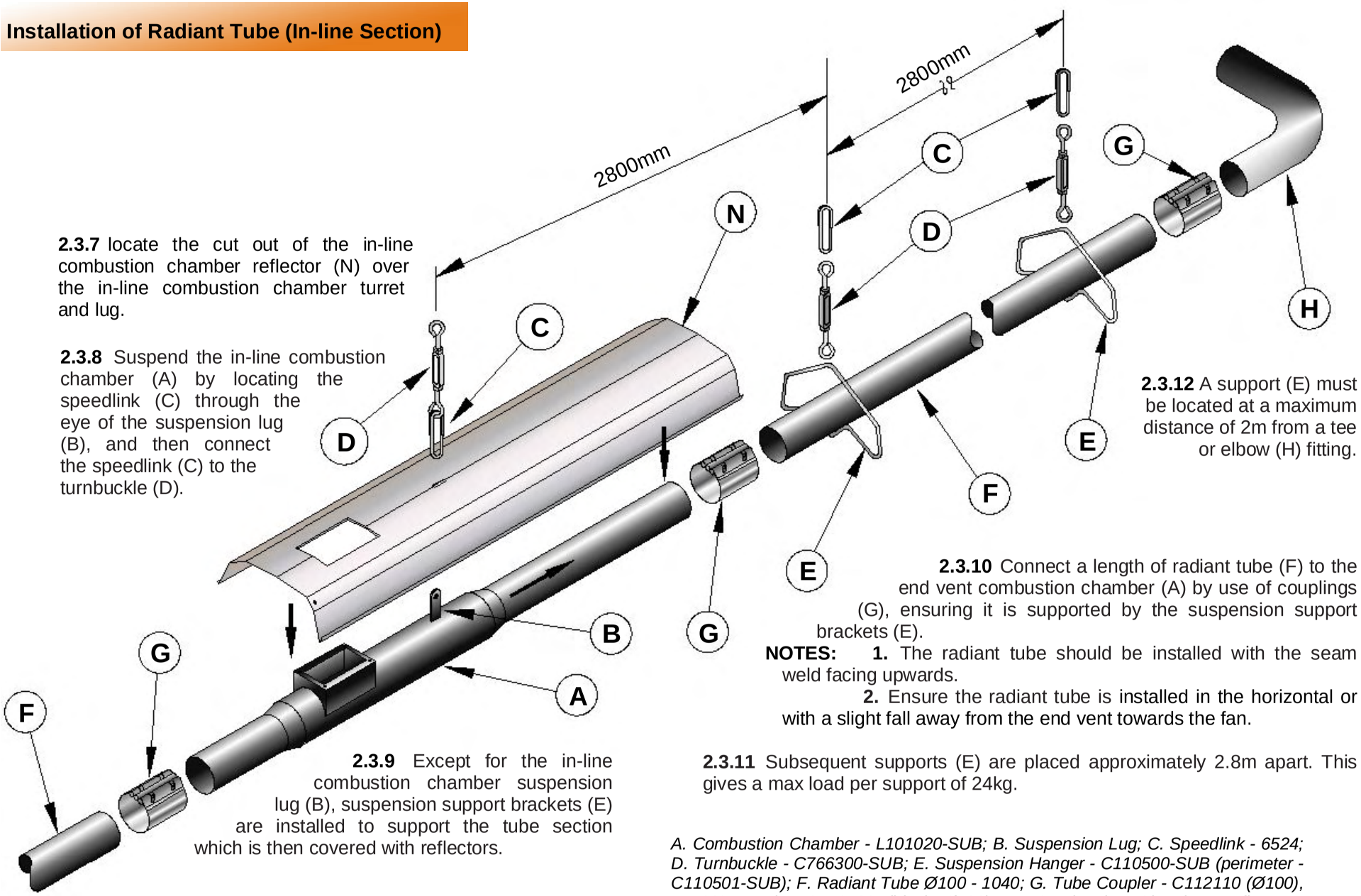

2.3.7 locate the cut out of the in-line combustion chamber reflector (N) over the in-line combustion chamber turret and lug.

2.3.8 Suspend the in-line combustion chamber (A) by locating the speedlink (C) through the eye of the suspension lug (B), and then connect the speedlink (C) to the turnbuckle (D).

2.3.12 A support (E) must be located at a maximum distance of 2m from a tee or elbow (H) fitting.

2.3.10 Connect a length of radiant tube (F) to the end vent combustion chamber (A) by use of couplings (G), ensuring it is supported by the suspension support brackets (E).

NOTES: **1.** The radiant tube should be installed with the seam weld facing upwards.

2. Ensure the radiant tube is installed in the horizontal or with a slight fall away from the end vent towards the fan.

2.3.9 Except for the in-line combustion chamber suspension lug (B), suspension support brackets (E) are installed to support the tube section which is then covered with reflectors.

2.3.11 Subsequent supports (E) are placed approximately 2.8m apart. This gives a max load per support of 24kg.

A. Combustion Chamber - L101020-SUB; B. Suspension Lug; C. Speedlink - 6524; D. Turnbuckle - C766300-SUB; E. Suspension Hanger - C110500-SUB (perimeter - C110501-SUB); F. Radiant Tube Ø100 - 1040; G. Tube Coupler - C112110 (Ø100), H. 90° Bend - C112108 (black Ø100); N. Combustion Chamber Reflector - L105050.

2.4.1 Tail pipe hangers (K) slung from turnbuckles (D) and Speedlinks (C) are installed to hang the manifold and tail pipe section which will be without reflectors.

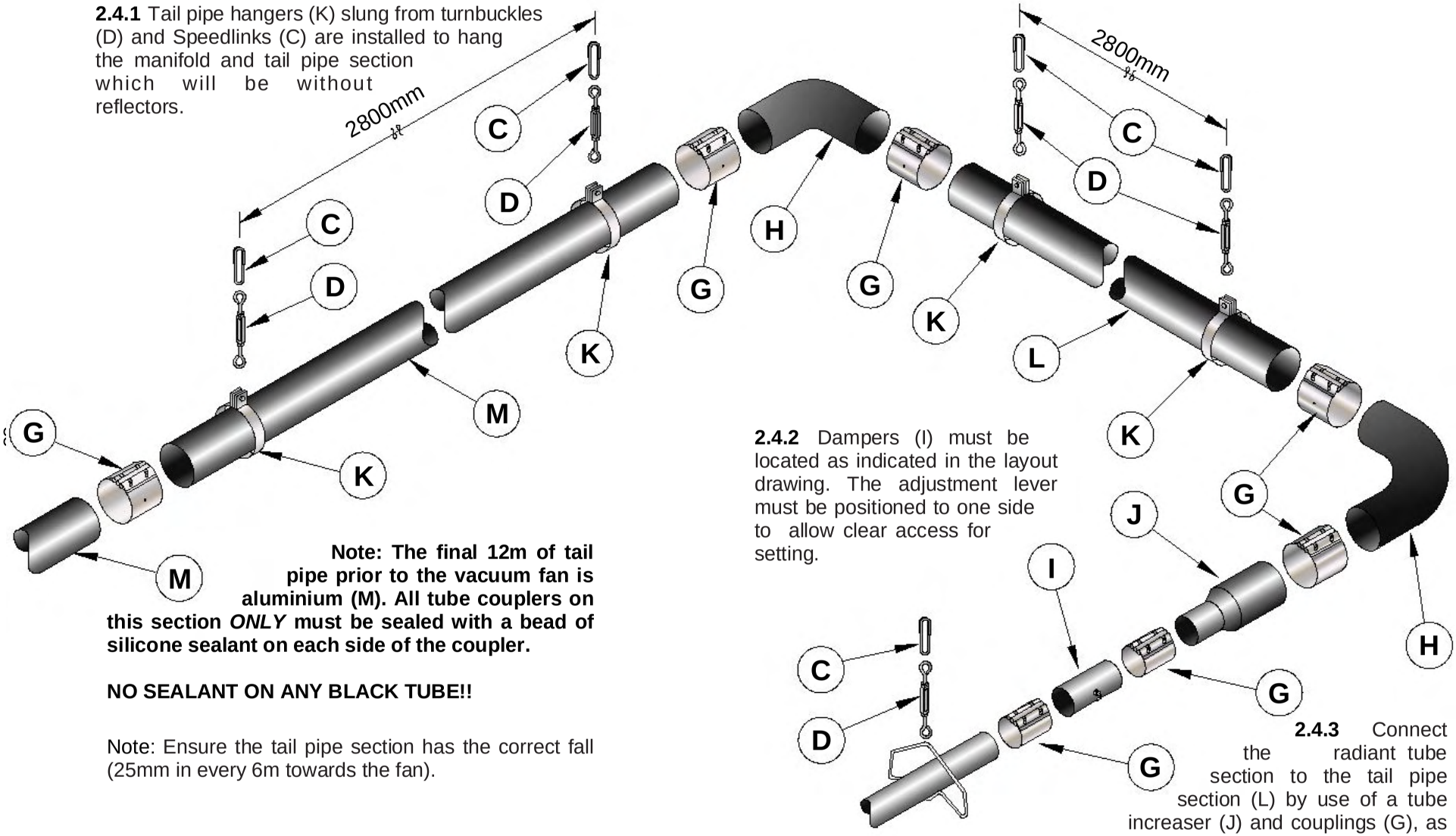

2.4.2 Dampers (I) must be located as indicated in the layout drawing. The adjustment lever must be positioned to one side to allow clear access for setting.

Note: The final 12m of tail pipe prior to the vacuum fan is aluminium (M). All tube couplers on this section *ONLY* must be sealed with a bead of silicone sealant on each side of the coupler.

NO SEALANT ON ANY BLACK TUBE!!

Note: Ensure the tail pipe section has the correct fall (25mm in every 6m towards the fan).

2.4.3 Connect the radiant tube section to the tail pipe section (L) by use of a tube increaser (J) and couplings (G), as per the layout drawing.

C. Speedlink - 6524; D. Turnbuckle - C766300-SUB; E. Suspension Hanger - C110500-SUB; G. Tube Coupler - C112110 (Ø100), C112120 (Ø150); H. 90° Bend - C112108 (black Ø100), C112109 (black Ø150), L101554 (Alum Ø150); I. Damper - C110241-SUB; J. Increaser - C112117; K. Ø150 Tail Pipe Hanger - C112015; L. Ø150 Black Tail Pipe - C112126; M. Ø150 Alum Tail Pipe - 7230-3.

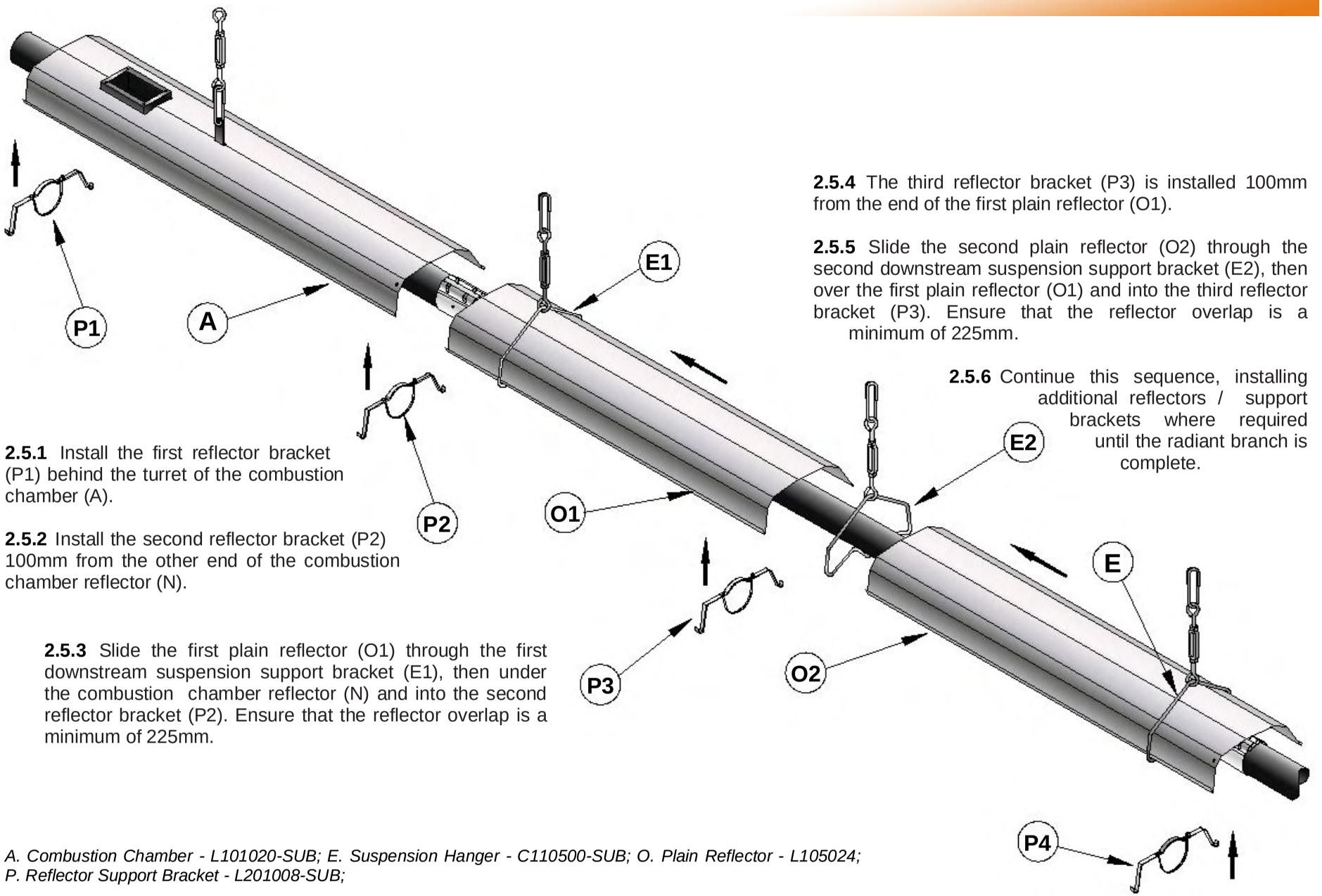

2.5.1 Install the first reflector bracket (P1) behind the turret of the combustion chamber (A).

2.5.2 Install the second reflector bracket (P2) 100mm from the other end of the combustion chamber reflector (N).

2.5.3 Slide the first plain reflector (O1) through the first downstream suspension support bracket (E1), then under the combustion chamber reflector (N) and into the second reflector bracket (P2). Ensure that the reflector overlap is a minimum of 225mm.

2.5.4 The third reflector bracket (P3) is installed 100mm from the end of the first plain reflector (O1).

2.5.5 Slide the second plain reflector (O2) through the second downstream suspension support bracket (E2), then over the first plain reflector (O1) and into the third reflector bracket (P3). Ensure that the reflector overlap is a minimum of 225mm.

2.5.6 Continue this sequence, installing additional reflectors / support brackets where required until the radiant branch is complete.

A. Combustion Chamber - L101020-SUB; E. Suspension Hanger - C110500-SUB; O. Plain Reflector - L105024; P. Reflector Support Bracket - L201008-SUB;

2.6.1 The corner section must first be assembled by overlapping the right hand reflector (Q1) over the tabbed left hand reflector (Q2) and secured using a No. 8 self tapping screws into a capture nut placed on the flange of the reflector (Q2). nb Ensure that the two reflector overlaps are 225mm.

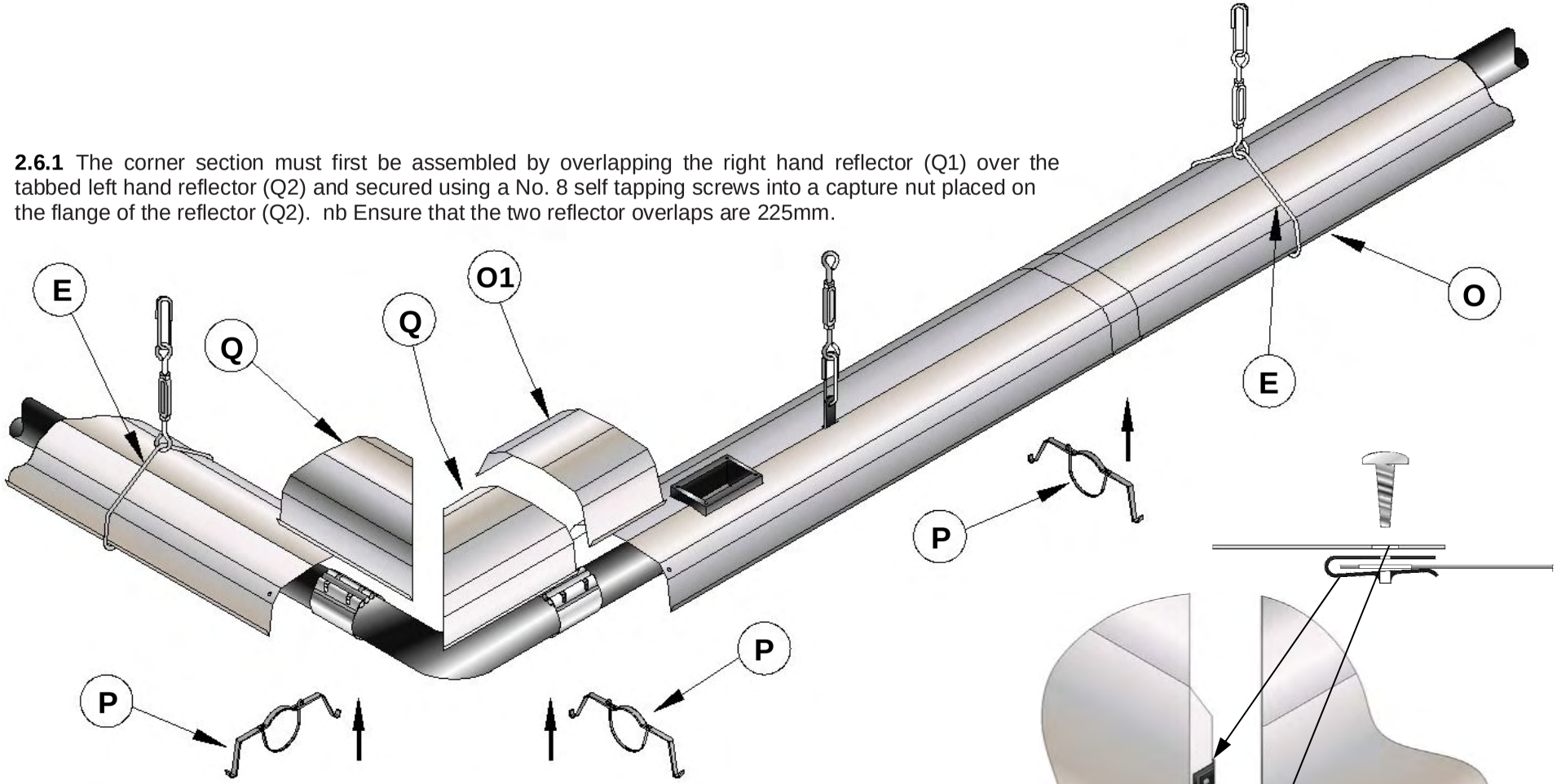

2.6.2 Position a reflector support bracket (P) at the centre of each reflector overlap.

2.6.3 If a bend connects directly with the rear of an in-line combustion chamber, a short section of plain reflector (O1) will need to be used by cutting down a standard length. NOTE: this is the only situation where a reflector is cut short, in all other situations increase of the overlap will be necessary.

A. Combustion Chamber - L101020-SUB; E. Suspension Hanger - C110500-SUB; O. Plain Reflector - L105024; P. Reflector Support Bracket - L201008-SUB; Q. Corner Reflector Assembly - L105009-SUB

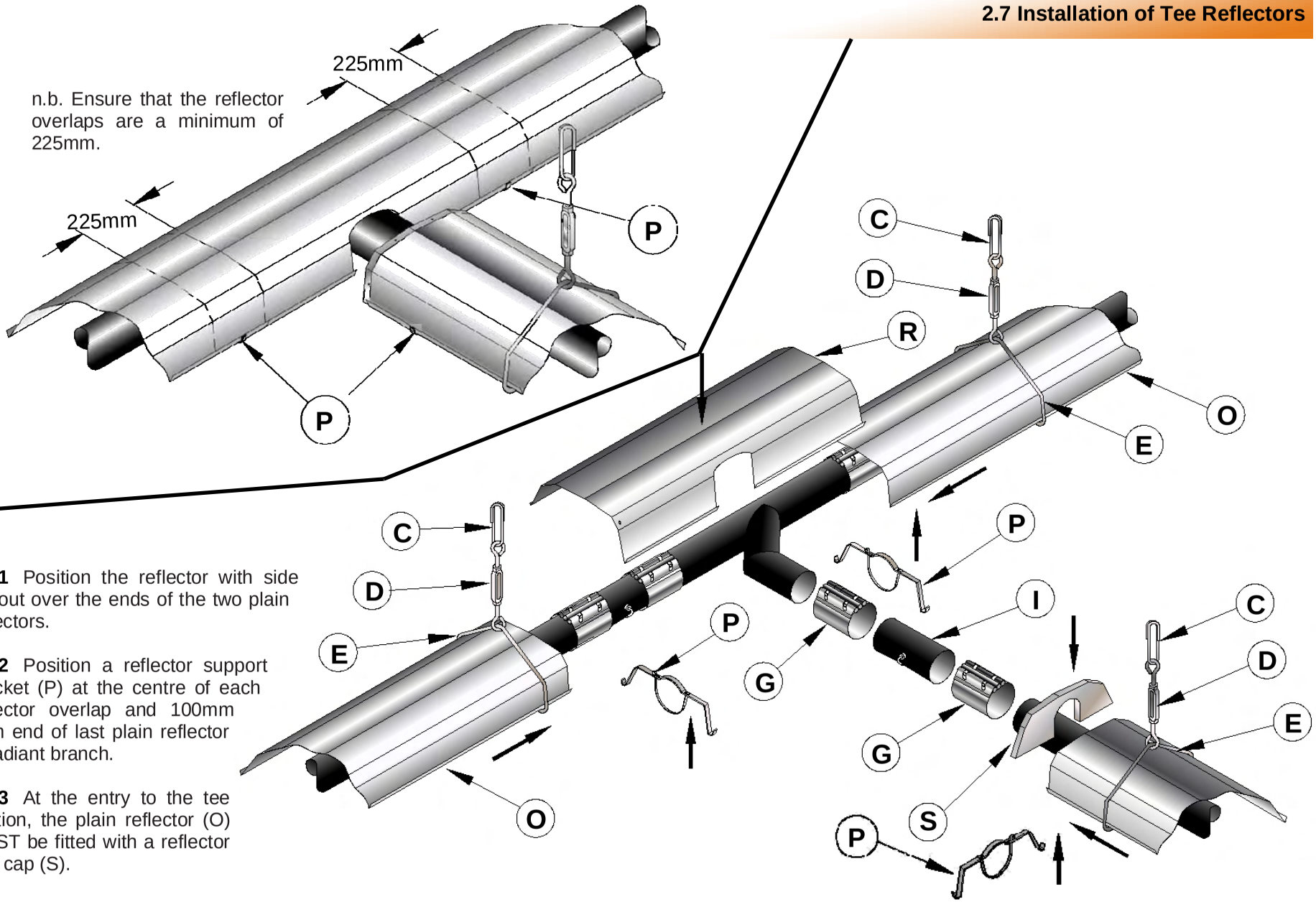

n.b. Ensure that the reflector overlaps are a minimum of 225mm.

2.7.1 Position the reflector with side cut-out over the ends of the two plain reflectors.

2.7.2 Position a reflector support bracket (P) at the centre of each reflector overlap and 100mm from end of last plain reflector in radiant branch.

2.7.3 At the entry to the tee section, the plain reflector (O) MUST be fitted with a reflector end cap (S).

C. Speedlink - 6524; D. Turnbuckle - C766300-SUB; E. Suspension Hanger - C110500-SUB; G. Tube Coupler - C112110 (Ø100), C112120 (Ø150); I. Damper - C110241-SUB; O. Plain Reflector - L105024; P. Reflector Support Bracket - L201008-SUB; R. Reflector with Side cut out - L105026; S. End Cap - L105043;

2.8.1 General. Ensure all reflector overlaps are a minimum of 225mm and that there is a reflector support bracket positioned in the centre of the overlap.

2.8.2 End Caps. At the end of each reflected radiant branch the last reflector must have an end cap (S) fitted.

2.8.2.1 Using the end cap (S) as a template mark the positions of the two fixing holes onto the *last* reflector. Drill two 5mm diameter holes through the positions marked.

2.8.2.2 Position the end cap (S) under the last reflector and secure using the two M4 set-screws provided.

2.8.3 Perimeter reflectors (Not shown) Perimeter reflectors are used when the radiant tube is mounted at the perimeter of the building. They are standard 2.4m long reflectors but with one side extended to direct the radiant heat away from the wall.

Special perimeter suspension support brackets and perimeter reflector bracket assemblies are provided and the assembly procedure is the same as above, with the exception of the perimeter combustion chamber reflectors. The perimeter combustion chamber reflectors have a cut-out for the combustion chamber turret and suspension lug at both ends so that the one reflector can be used for either left or right hand perimeter systems.

Thus, the overlap of the perimeter combustion chamber reflector with the second perimeter reflector must be such that the cut-outs are adequately covered ie. **1000mm overlap**.

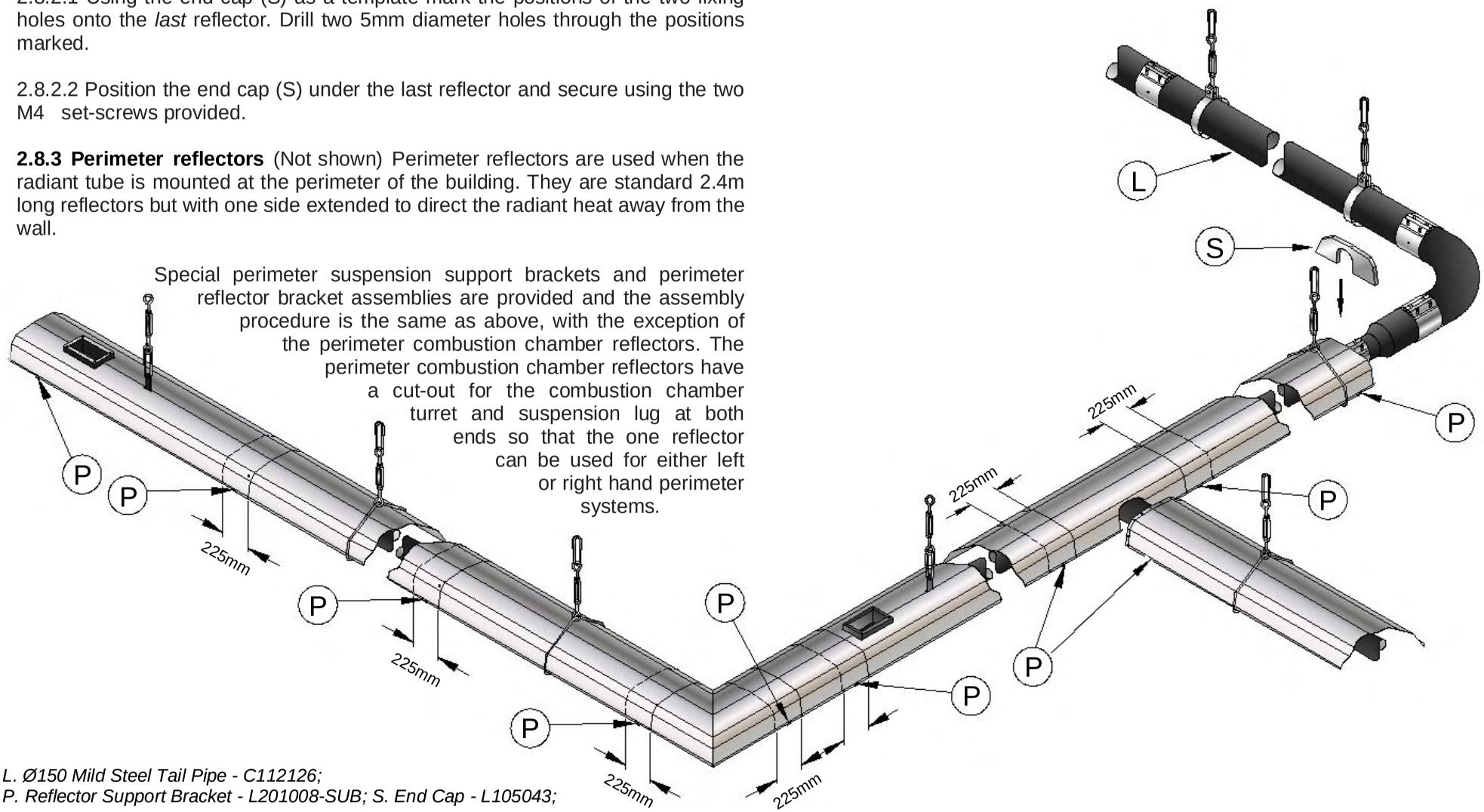

L. Ø150 Mild Steel Tail Pipe - C112126;
P. Reflector Support Bracket - L201008-SUB; S. End Cap - L105043;

C. Speedlink - 6524; D. Turnbuckle - C766300-SUB; E. Suspension Hanger - C110500-SUB; G. Tube Coupler - C112120 (Ø150); M. Ø150 Alum Tail Pipe - 7230-3; T. Expansion Joint - 7532; U. Jubilee Clip Ø150 - 7542; V. Condensate Trap Assembly - L101527-SUB; W. Tee Piece Ø150 - M201024; Xa. Fan Wall Mounting Platform - L103060; Xb. (alternate) Fan Base Frame; Y. Fan - refer table.9; Za. Ø150 Flue Pipe (1m lengths) - A791050; Zb. Flue Terminal - L101580-SUB

2.9.1.2 The vacuum fan (Y) must be located as shown in the layout drawing and must have a bottom horizontal discharge.

The fan can be fitted to the mounting platform (Xa) which is fixed to the wall or building structure.

Alternatively, the fan can be suspended from the roof structure, via drop rods (not supplied) and mounted on base frame (Xb).

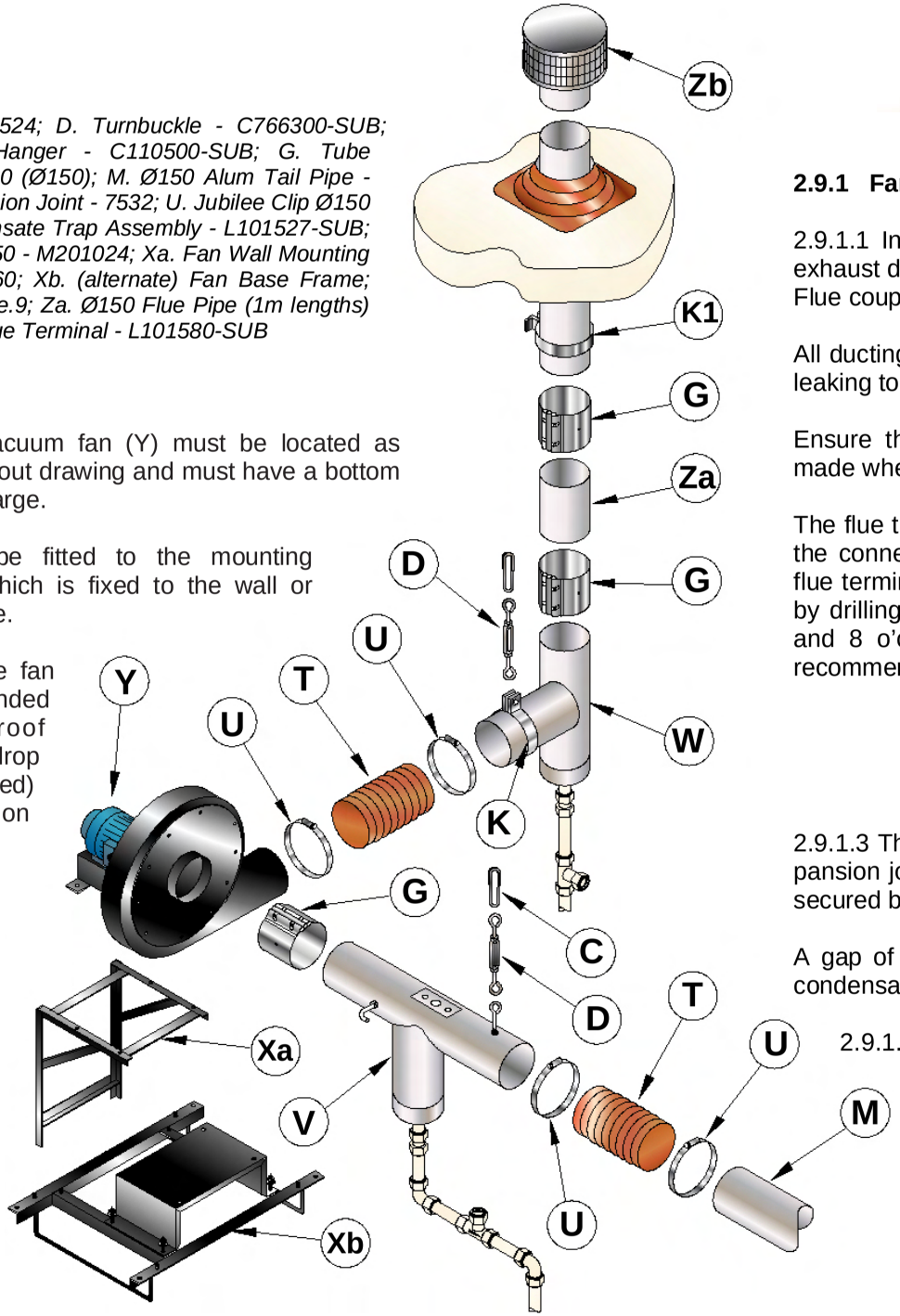

2.9.1 Fan exhaust duct for vertical discharge

2.9.1.1 In vertical discharge, a tee piece (W) must be fitted in the exhaust ducting with a connection to drain.
Flue couplers (G) are used to connect all exhaust flue fittings.

All ducting must be sealed using silicone sealant to avoid condensate leaking to the outside of the ductwork.

Ensure that an adequate weatherproof seal such as a 'dektite' is made where the duct passes through the roof.

The flue terminal (Zb) is fitted by first applying silicone sealant around the connecting tube ends and then inserting the swaged end of the flue terminal into the 150mm diameter flue duct. The joint is secured by drilling through the tube and connector with 3 pop rivets at 12, 4 and 8 o'clock position. 3.5 mm (3/16 in) diameter pop rivets are recommended. (Not supplied by AmbiRad).

2.9.1.3 The system aluminium tail pipe (M) is connected via an expansion joint (T) to the 150 mm condensate trap assembly (V) and secured by jubilee clips (U) at each end.

A gap of approximately 150mm must be maintained between the condensate trap assembly (V) and the tail pipe (M).

2.9.1.4 The condensate trap assembly (V) must be supported using a turnbuckle (D) which is connected to the eye bolt by a speedlink (C).

2.9.1.5 The condensate trap assembly (V) is connected to the 150mm diameter fan inlet connection via coupler (G).

2.9.2 Fan exhaust duct for horizontal discharge

2.9.2.1 The exhaust flue duct (Za) must incline downwards away from the fan to avoid condensate running back into the fan. Flue couplers (G) are used to connect all exhaust duct fittings.

All flue ducting must be sealed using silicone sealant to avoid condensate leaking to the outside of the ductwork. A non-combustible sleeve (a - not supplied by AmbiRad) must be fitted between the exhaust flue duct and the building wall.

The flue terminal (Zb) is fitted by first applying silicone sealant around the connecting tube ends and then inserting the swaged end of the flue terminal into the 150mm diameter flue duct. The joint is secured by drilling through the tube and connector with 3 pop rivets at 12, 4 and 8 o'clock position. 3.5 mm (3/16 in) diameter pop rivets are recommended. (Not supplied by AmbiRad).

2.9.2.2 The vacuum fan (Y) must be located as shown in the layout drawing and must have a bottom horizontal discharge.

The fan can be fitted to the mounting platform (Xa) which is fixed to the wall or building structure. Alternatively, the fan can be suspended from the roof structure, via drop rods (not supplied) and mounted on base frame (Xb).

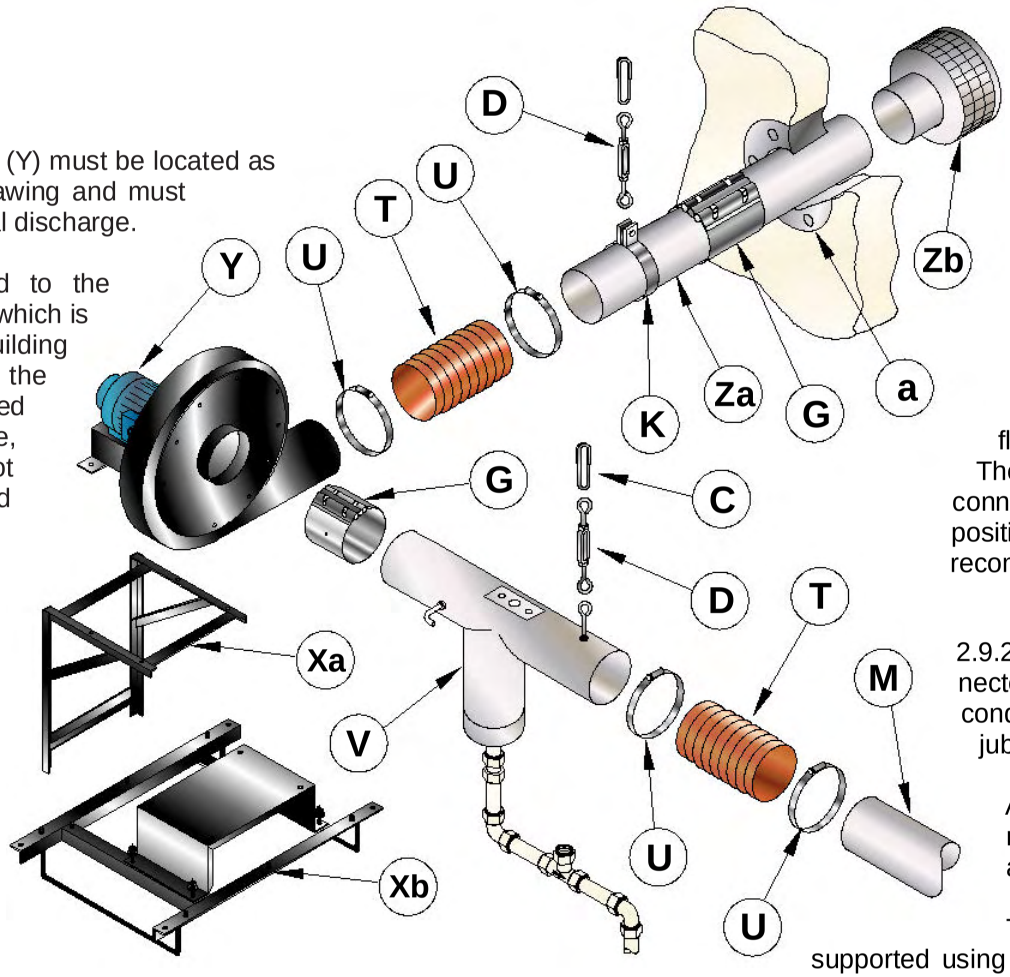

2.9.2.3 The system aluminium tail pipe (M) is connected via an expansion joint (T) to the 150 mm condensate trap assembly (V) and secured by jubilee clips (U) at each end.

A gap of approximately 150mm must be maintained between the condensate trap assembly (V) and the tail pipe (M).

The condensate trap assembly (V) must be supported using a turnbuckle (D) which is connected to the eye bolt by a speedlink (C).

The condensate trap assembly (V) is connected to the 150mm diameter fan inlet connection via coupler (G).

C. Speedlink - 6524; D. Turnbuckle - C766300-SUB; E. Suspension Hanger - C110500-SUB; G. Tube Coupler - C112120 (Ø150); M. Ø150 Alum Tail Pipe - 7230-3; T. Expansion Joint - 7532; U. Jubilee Clip Ø150 - 7542; V. Condensate Trap Assembly - L101527-SUB; Xa. Fan Wall Mounting Platform - L103060; Xb. (alternate) Fan Base Frame; Y. Fan - refer table.9; Za. Ø150 Flue Pipe (1m lengths) - A791050; Zb. Flue Terminal - L101580-SUB

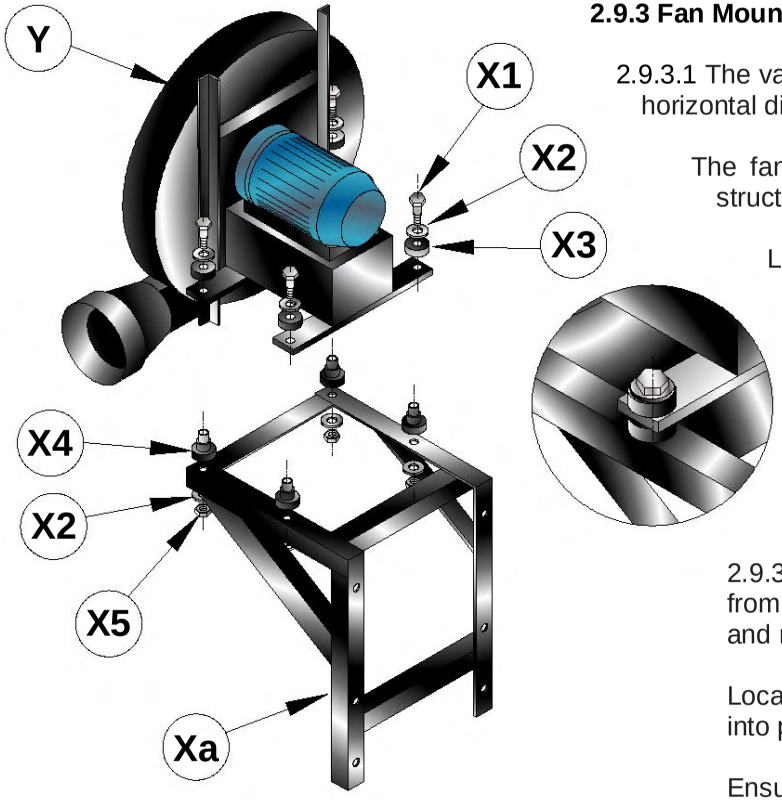

2.9.3 Fan Mounting

2.9.3.1 The vacuum fan (Y) must be located as shown in the layout drawing and must have a bottom horizontal discharge.

The fan should be fitted to a mounting platform (X) which is fixed to the wall or building structure. Mounting holes are pre drilled on the vertical legs of the platform.

Locate the mounting stool of the fan into position on the platform (Xa). Ensure anti-vibration mountings are used and secure in position.

Anti-vibration mountings are supplied as a kit of parts (X1 - X5).

2.9.3.2 Alternatively, the fan can be suspended from a roof structure, via drop (not supplied) and mounted on base frame (Xb).

Locate the mounting stool of the fan into position on the frame (Xb).

Ensure anti-vibration mountings are used and secure in position.

X5 not used with base frame.

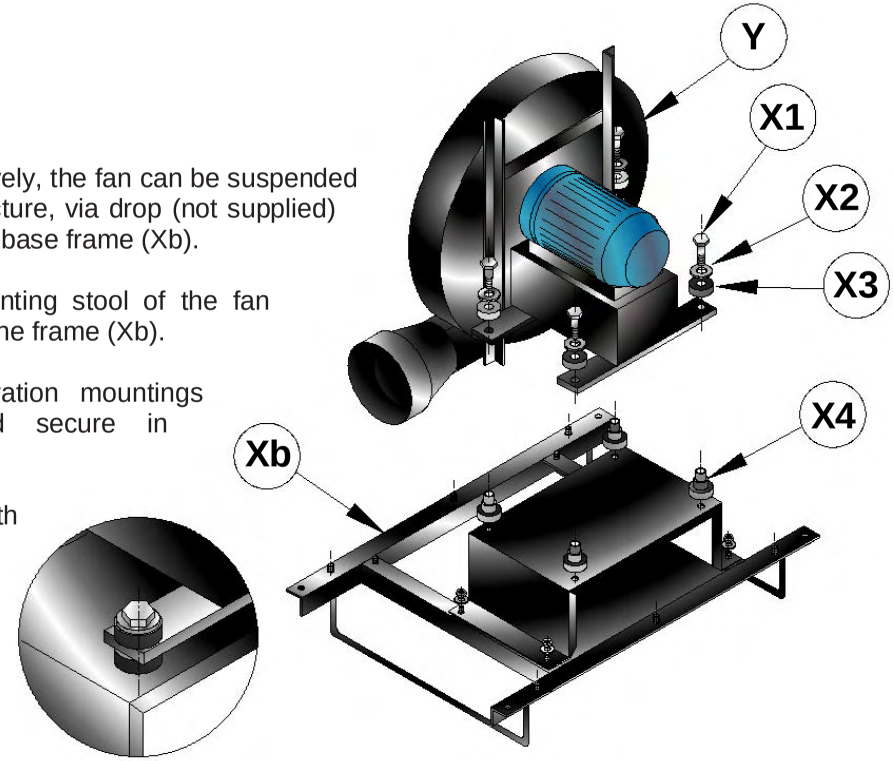

Xa. Fan Wall Mounting Platform - L103060; Xb. (alternate) Fan Base Frame;
X1-5 Anti-vibration Mount Kit - L103045-SUB; Y. Fan - refer table.9;

2.9.4 Condensate Trap Assembly

The condensate trap assembly (V) is connected to the 150mm diameter fan inlet connection via a coupler.

Ensure that a 1½ in (38 mm) drain tube assembly is fitted to the connection (V1) and to the non-return valve (V3) via bends (V2).

Ensure that the non-return valve (V3 - supplied) is fitted with the flow indication arrow pointing AWAY from the trap, in the HORIZONTAL position and at a vertical distance of 670mm* for BH type fans or 520mm* for B type fans, below the condensate trap assembly.

The condensate drainage pipe (V4 - not supplied) should be run in a standard drain pipe material, e.g. polyvinyl chloride (PVC), unplasticized polyvinyl chloride (PVC-U), ancrylonitrile-butadiene-styrene (ABS), polypropylene polyproene (PP) or cross-linked polyviynyl chloride (PVC-C).

Copper or copper based alloy shall not be used for condensate drains. See BS 6896.

The drain tube must be resistant against the action of flue gas condensate and suitable for operation up to a maximum temperature of 50°C.

Ensure that the drain tube is adequately supported.

All connecting drainage pipework should have a fall of at least 2.5° to the horizontal or approximately 50mm per metre of pipe run.

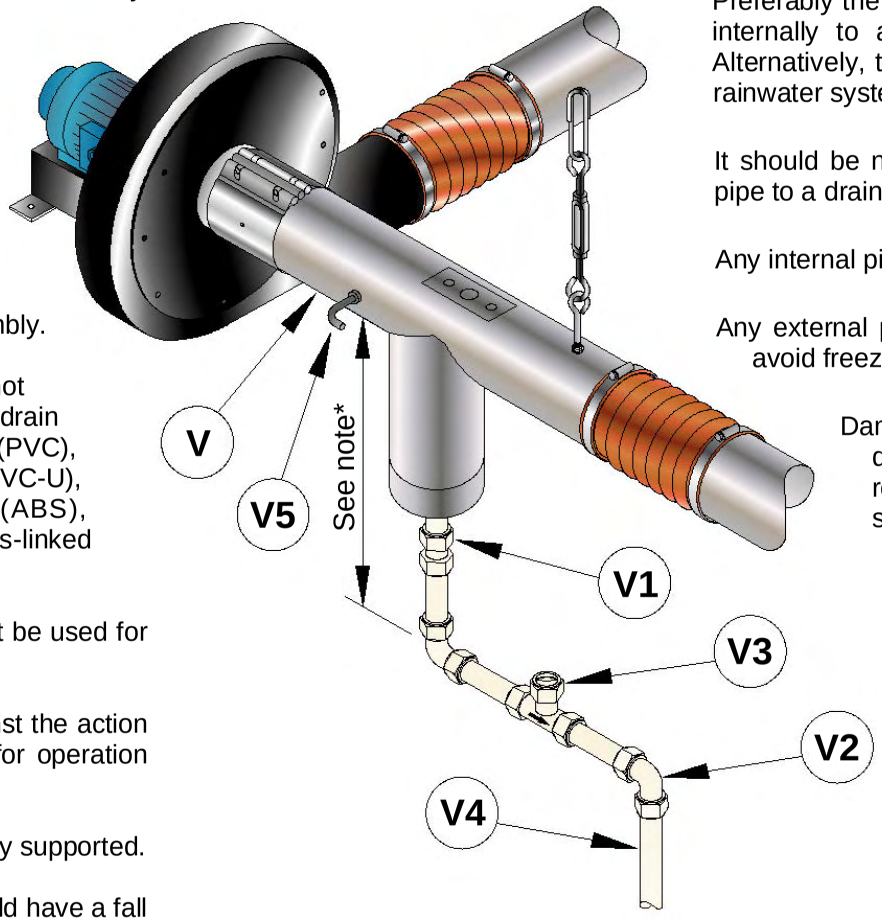

If the drainage pipe has a run externally, it is recommended that the pipe is insulated to protect against frost.

Preferably the condensate pipe should run and terminate internally to a soil and vent stack or a waste pipe. Alternatively, the condensate can be discharged into the rainwater system or a purpose-made soakway.

It should be noted that the connection of a condensate pipe to a drain might be subject to local building controls.

Any internal pipework should be of a diameter stated.

Any external pipework should be kept to a minimum to avoid freezing.

Damper to control the vacuum of the system during commissioning, is adjusted by rotating handle (V5) then locking with grub screw.

V. Condensate Trap Assembly - L101527-SUB; V1 - Tube Connector; V2. Drain Tube; V3. Non-return Valve; V4. Drain Tube; V5. Damper Handle

2.10 Full Breakdown of Typical System

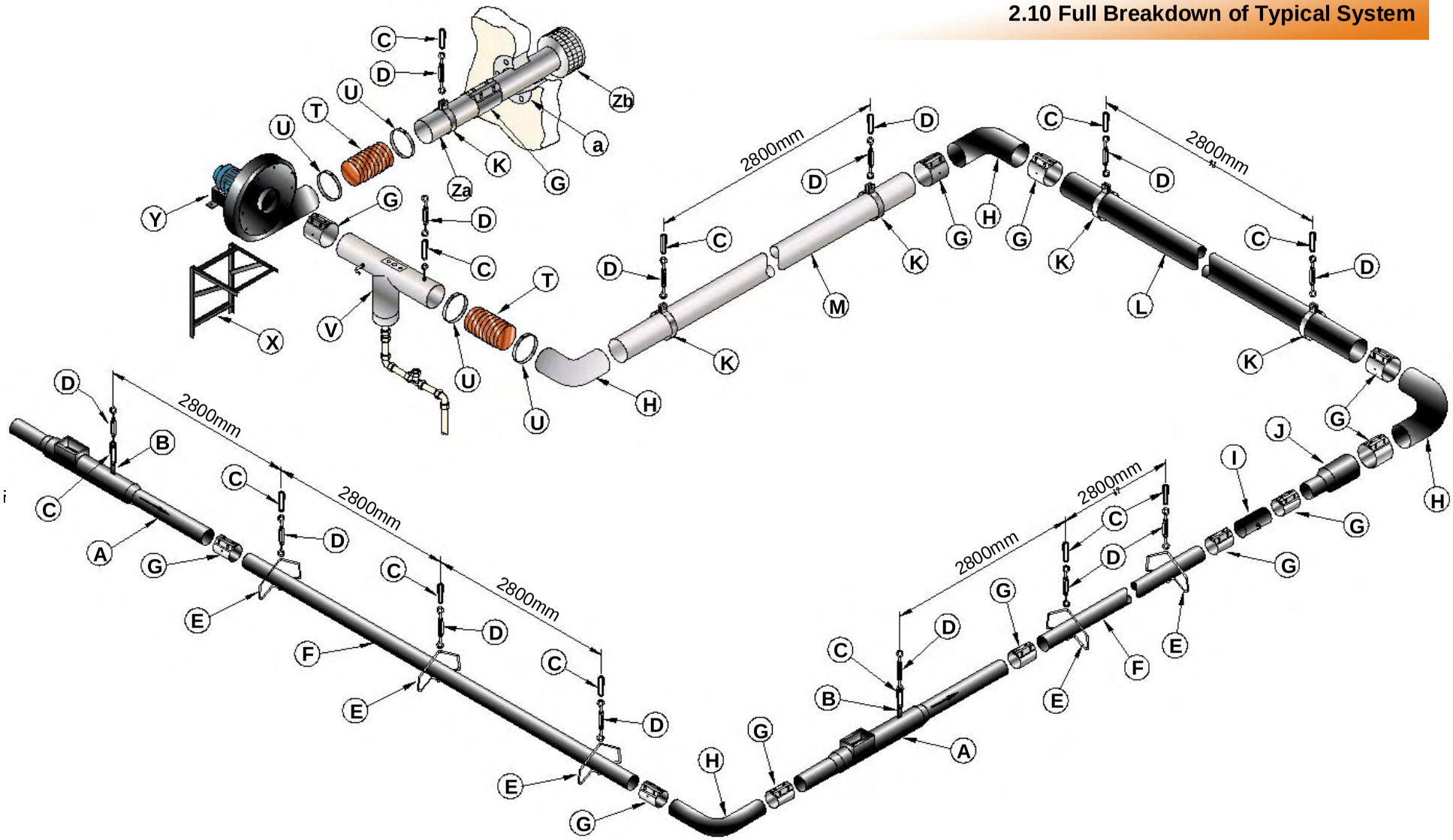

A. Combustion Chamber - L101020-SUB; B. Suspension Lug; C. Speedlink - 6524; D. Turnbuckle - C766300-SUB; E. Suspension Hanger - C110500-SUB; F. Radiant Tube Ø100 - 1040; G. Tube Coupler - C112110 (Ø100), C112120 (Ø150); H. 90° Bend - C112108 (black Ø100), C112109 (black Ø150), L101554 (Alum Ø150); I. Damper - C110241-SUB; J. Increaser - C112117; K. Ø150 Tail Pipe Hanger - C112015; L. Ø150 Black Tail Pipe - C112126; M. Ø150 Alum Tail Pipe - 7230-3; T. Expansion Joint - 7532; U. Jubilee Clip Ø150 - 7542; V. Condensate Trap Assembly - L101527-SUB; W. Tee Piece Ø150 - M201024; X. Fan Mounting Platform - L103060; Y. Fan - refer table.9; Za. Ø150 Flue Pipe (1m lengths) - A791050; Zb. Flue Terminal - L101580-SUB

2.11 Installation of End Vent and In Line Burners

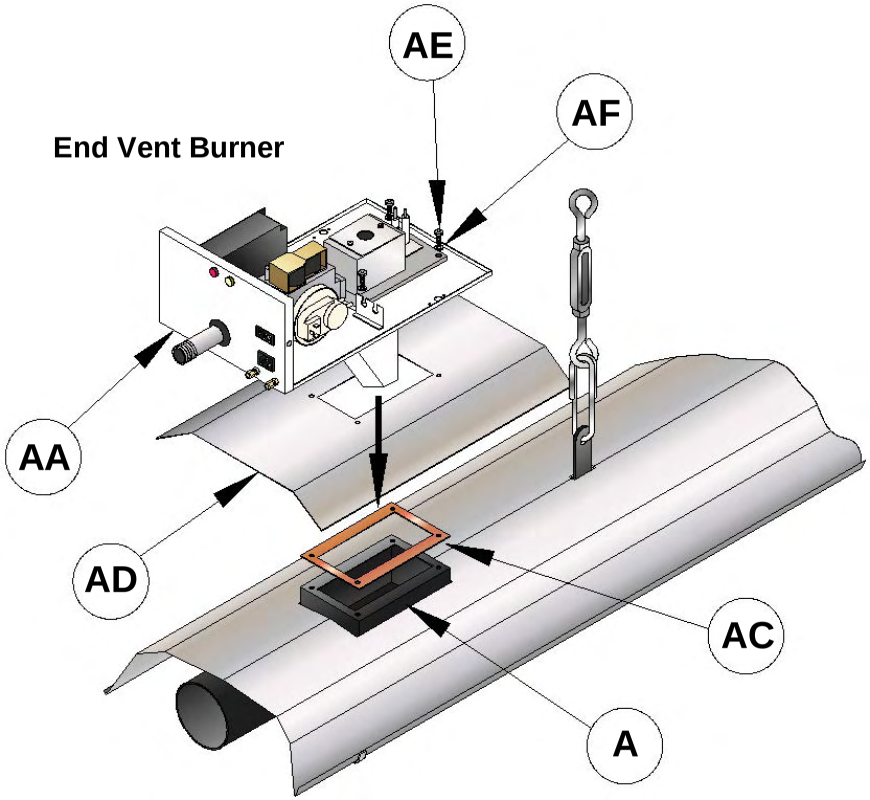

2.11.1 Each burner is marked with its rated heat input, "EV" denotes end vent burner (AA), "IL" denotes inline burner (AB). The correct burner **MUST** be located as indicated on the site layout drawing.

If the difference between the two types is still unclear, the end vent burner has a pressure switch fitted inside and has two air pipe connectors located in the bottom right hand corner when looking at the rear of the unit.

2.11.2 Position gasket (AC) on combustion chamber turret (A), in line with all four fixing holes.

2.11.3 Position heat shield (AD) on top of gasket (AC) in line with all four fixing holes of gasket and turret.

2.11.4 Fit each burner through heat shield (AD), gasket (AC) and turret. Square burner in line with all four fixing holes of gasket and turret.

2.11.5 Secure the burner through the heat shield (AD) and gasket (AC) to the turret using the four M6 bolts (AE) and washers (AF) provided.

2.11.6 Repeat for all other end vent and inline burners

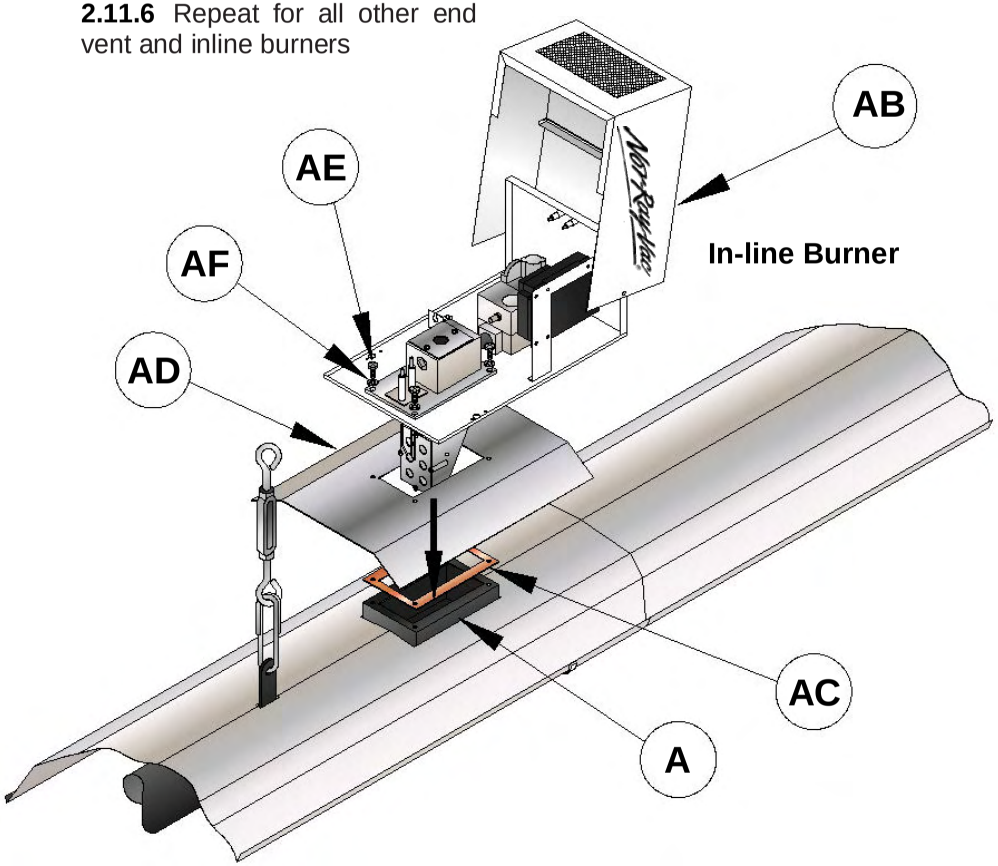

AA. End Vent Burner; AB. IL Burner; AC. Burner Gasket - L102032; AD. Burner Heat Shield - 200195; AE. 6mm Set Pin - 5429-1; AF. 6mm Washer - 5425

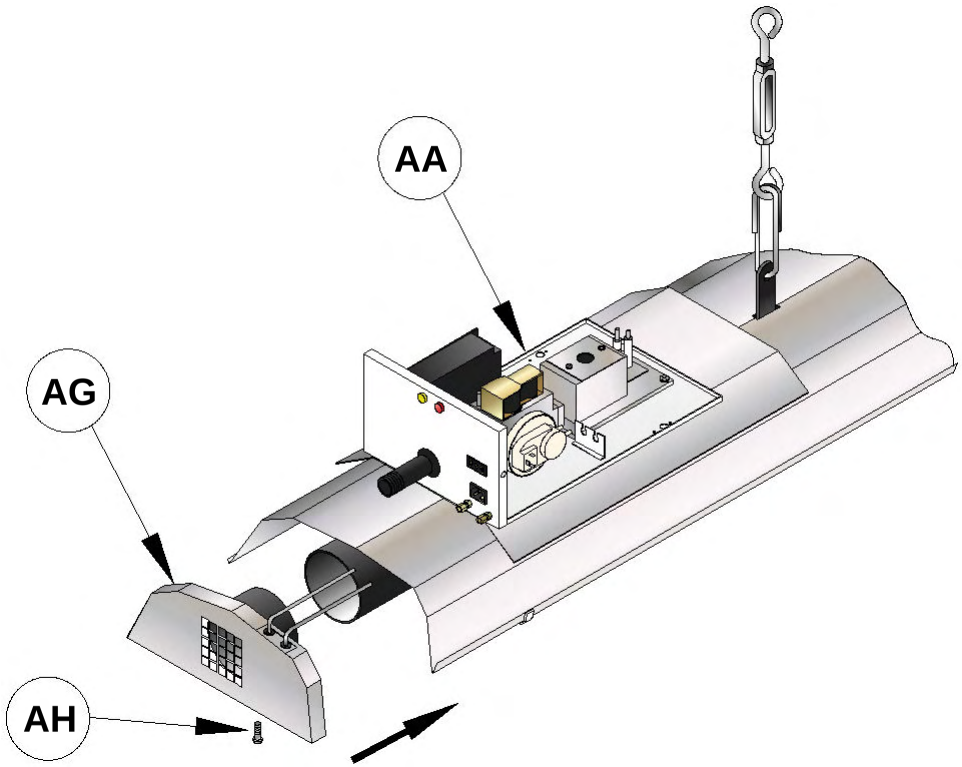

2.12.1 An end vent module or 'EVM' (AG) is positioned at each end vent burner position.

Each end vent module must be fitted with the correct end vent orifice plate to suit the end vent burner.

An orifice or orifice plate attached inside the EVM support spinning is located on the air entry point of the EVM.

2.12.2 Slide the EVM support spinning over the end vent combustion chamber tube.

2.12.3 Ensure combustion chamber tube end butts positively against the orifice plate.
Secure using the M8 set pin (AH).

2.12.4 With the EVM (AG) in position on the end of the combustion chamber:

a attach the 'U' shaped bundy piece (AJ) to the compression fitting labelled **'1'**

b attach the 'L' shaped bundy piece (AK) to the compression fitting labelled **'2'**, positioned at the rear of the end vent burner (AA).

Ensure fittings are tightened securely.

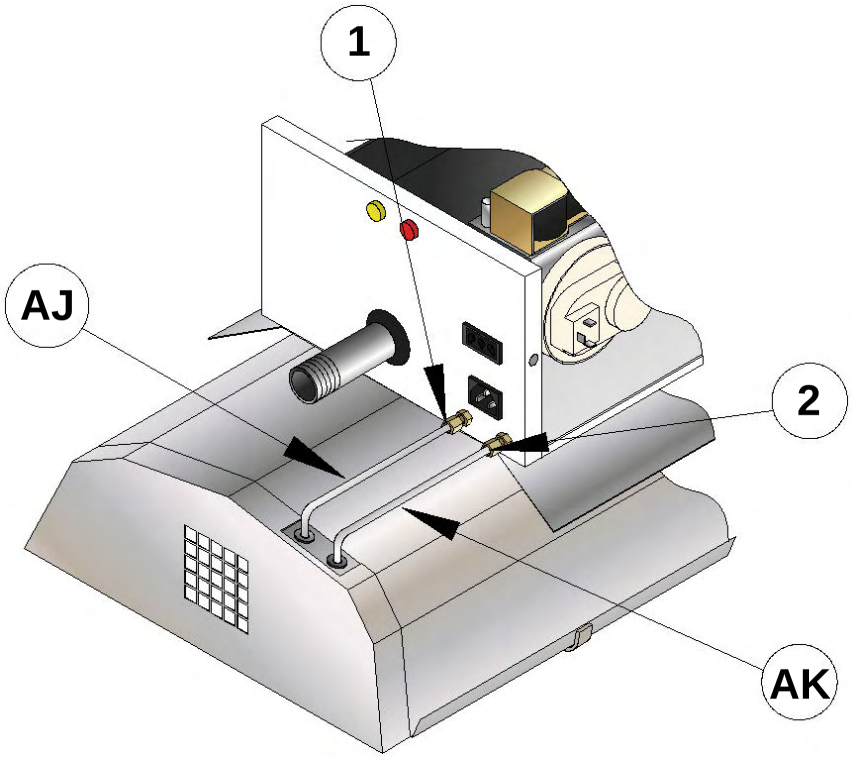

AA. End Vent Burner; AG. End Vent Module; AH. M8 Set Pin - 5447; AJ. Air Tube 1 - L104053; AK. Air Tube 2 - L104054; 1. Compression fitting # 1; 2. Compression Fitting # 2

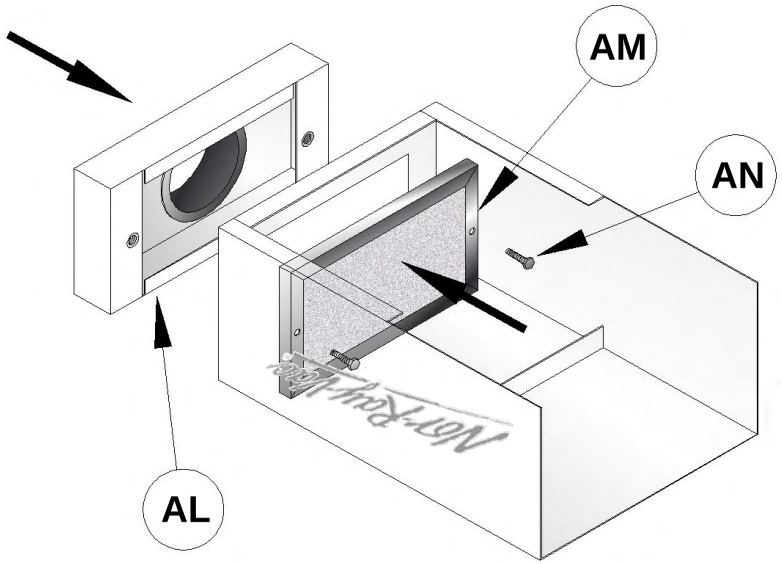

2.13.1 Fitting ducted air adaptor to burner assembly

The ducted air adaptor (AL) is fitted over the air inlet position of the burner housing lid using two M5x30 set-screws (AN).

The primary air filter (AM) will remain in place inside the housing lid (A) via the same screws.

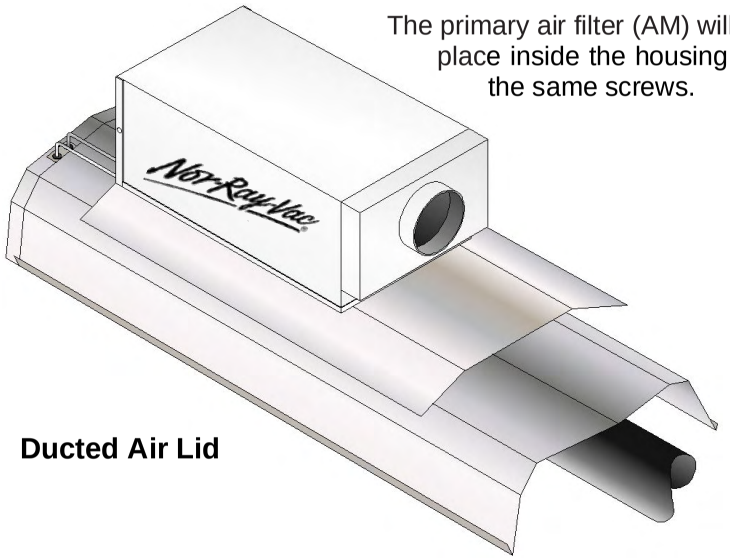

Ducted Air Lid

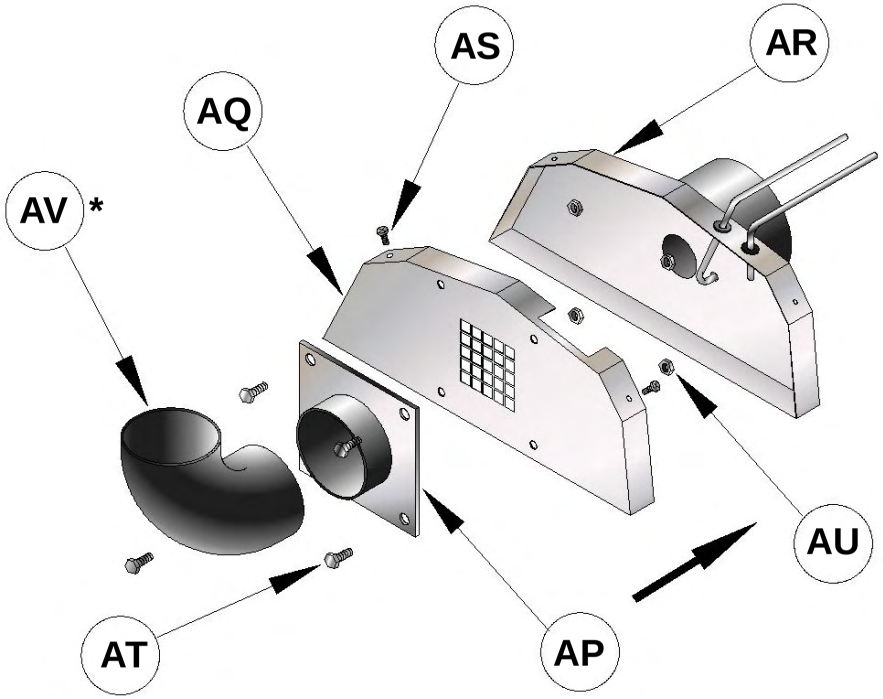

2.13.2 Fitting ducted air adaptor to end vent module

The ducted air adaptor (AP) is fitted to the air inlet position of the EVM. To achieve this, the EVM has to be taken apart. Remove the EVM.

2.13.2.1Unscrew the fasteners (AS) securing the EVM outer plate (AQ) and remove.

2.13.2.2 Position ducted air adaptor against inlet plate and secure using four M5 set screws (AT) washers and Nuts (AU) provided.

2.13.2.3 Reposition assembled plate onto the EVM inner plate (AR) and affix using screws (AS)

* Optional 90° elbow (AV) can be fitted to allow individual orientation.

AL. Burner Ducted Air Adaptor - L104115; AM. Filter - L102013; AN. M5x30 Set screw; AP. EVM Ducted Air Adaptor - L104122-SUB; AQ. EVM Outer Plate; AR. EVM Inner Plate; AS. EVM Fastener; AT. M5 Set Pin - 5369; AU. M5 Nut - 5350; AV. 90° Elbow - 7075-2

The Nor-Ray-Vac ballguard system consists of standard 2.44m long modules which are supported from the underside of the radiant tube. The ballguard sections are fitted in tandem along the system. Perimeter ballguards are installed in the same manor.

2.14.1 Installation

nb. Reflectors removed for clarity

2.14.1.1 Starting at each system end vent, position the 'U' bolts (BB) around the radiant tube, through the clamp bridge (BC) and secure using with M8 nuts (BE).
Ensure that the distance between the 'U' bolts is approximately 1100mm.
The 'U' bolt assemblies should be positioned **perfectly square** to ensure that the ballguard module lies horizontal when fitted.

2.14.1.2 A retaining plate (BD) is positioned on the underside of the ballguard (BA) at each 'U' bolt assembly position and secured using M8 nuts (BE) and washers (BF).

2.14.1.3 It is necessary to cut the edge of the ballguard section (BA) at the interface with the suspension support bracket.
If necessary a standard 2.44m long ballguard can be shortened by the Installation engineer.

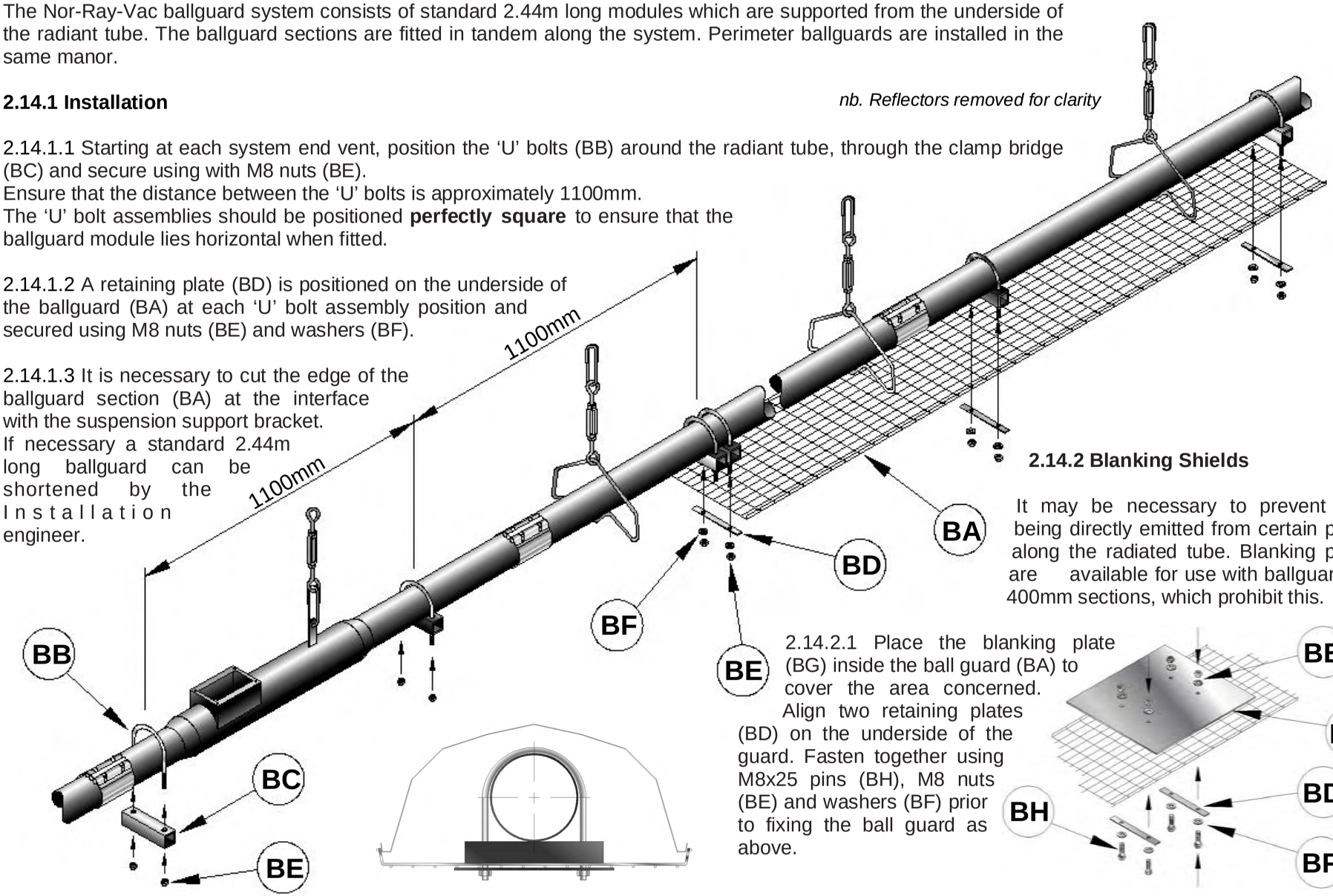

2.14.2 Blanking Shields

It may be necessary to prevent heat being directly emitted from certain points along the radiated tube. Blanking plates are available for use with ballguards in 400mm sections, which prohibit this.

2.14.2.1 Place the blanking plate (BG) inside the ball guard (BA) to cover the area concerned.
Align two retaining plates (BD) on the underside of the guard. Fasten together using M8x25 pins (BH), M8 nuts (BE) and washers (BF) prior to fixing the ball guard as above.

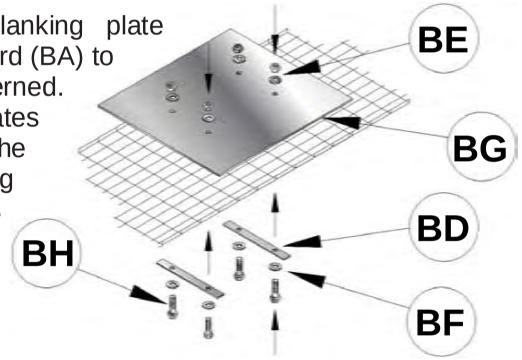

BA. 2.44M Ballguard - C110555; BB. 'U' Bolt - C110548; BC. Clamp Bridge - C110549; BD. Clamp Plate - C110449; BE. M8 Nut - 5441; BF. M8 Washer - 5445; BG. Blanking Shield - L106020; BH. M8 x 25 Set Pin

The Slimline 'M' decorative grille system consists of standard 2.44m long modular grille assemblies which are supported from the underside of the radiant tube. The modular assemblies are fitted in tandem along the system.

2.15.1 Standard 2.44m long modular grille assemblies

nb. Reflectors removed for clarity

2.15.1.1 Starting at each system end vent, position the 'U' bolts (BB) around the radiant tube, through the clamp bridge (BC) and secure using with M8 locknuts (BE) approximately 10mm from the ends of the threads.
Ensure that the distance between 'U' bolts is 1210mm. The 'U' bolt assemblies should be positioned **perfectly square** to ensure that the modular grille assembly lies horizontal when fitted.
2.15.1.2 Fit 2 eggcrate grille pieces (BL) into the standard 2.44 long grille support frame (BK).
2.15.1.3 Raise the modular grille assembly (BJ) and pass the threaded ends of the three 'U' bolts through the three sets of fixing holes.
2.15.1.3 Fit the M8 dome head nuts (BM) and washers (BF) to the threaded ends of the 'U' bolts. Check that the module is secure.

A standard 2.44m long modular grille assembly can be shortened to suit the system layout and also to accommodate corner reflector sections.

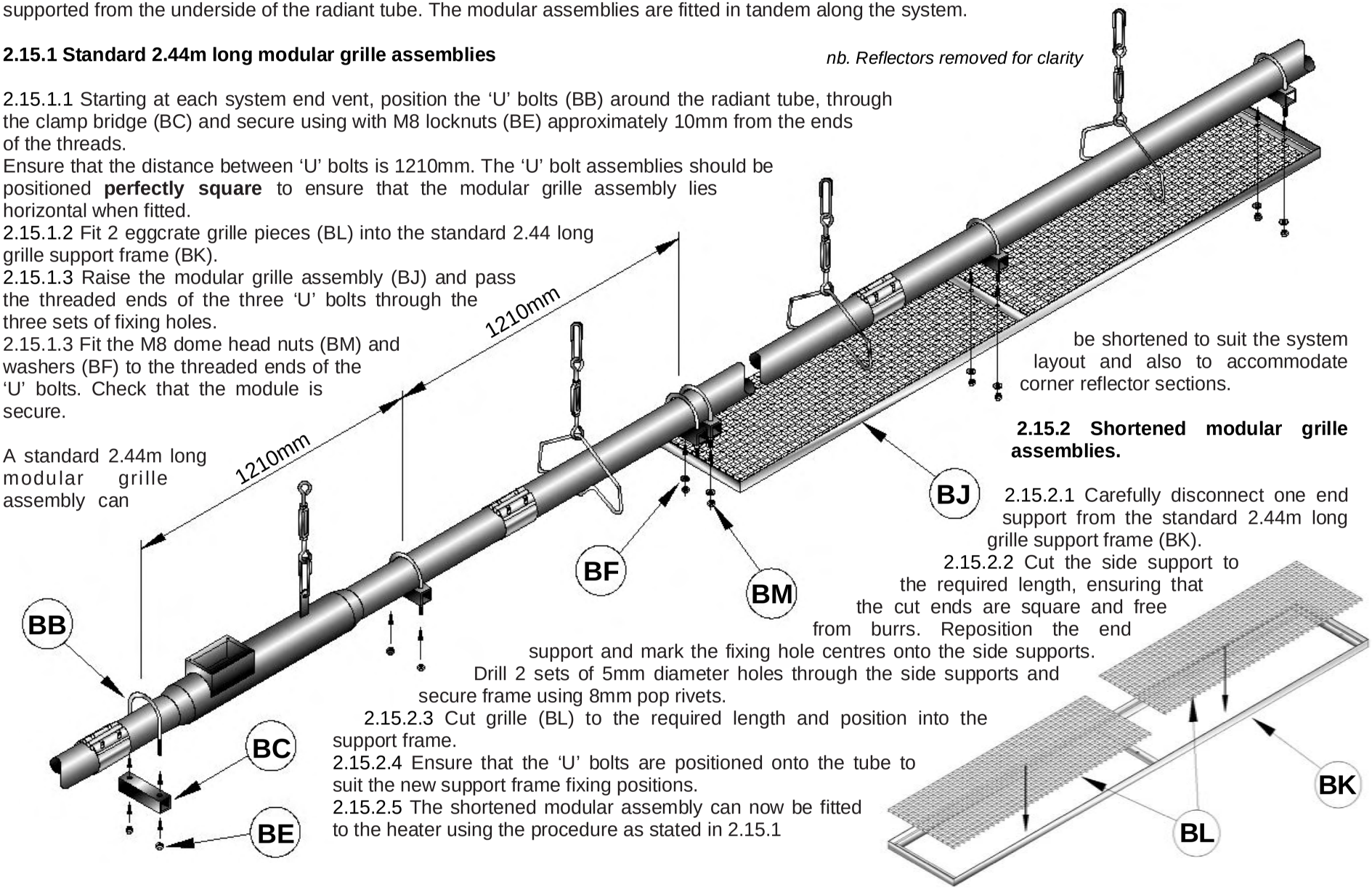

2.15.2 Shortened modular grille assemblies.

2.15.2.1 Carefully disconnect one end support from the standard 2.44m long grille support frame (BK).
2.15.2.2 Cut the side support to the required length, ensuring that the cut ends are square and free from burrs. Reposition the end support and mark the fixing hole centres onto the side supports. Drill 2 sets of 5mm diameter holes through the side supports and secure frame using 8mm pop rivets.
2.15.2.3 Cut grille (BL) to the required length and position into the support frame.
2.15.2.4 Ensure that the 'U' bolts are positioned onto the tube to suit the new support frame fixing positions.
2.15.2.5 The shortened modular assembly can now be fitted to the heater using the procedure as stated in 2.15.1

BB. 'U' Bolt - C110548; BC. Clamp Bridge - C110549; BE. M8 Nut - 5441; BF. M8 Washer - 5445; BJ. Modular Grille Assembly - L106000-SUB; BK. Support Frame - L106004; BL. Eggcrate Grille - L106015; BM. M8 Dome Nuts - L106007

It may be necessary to prevent heat being directly emitted from certain points along the radiated tube. Blanking plates are available in either 1250mm or 400mm sections, which prohibit this.

2.16.1 Installation

2.16.1.1 Locate radiant tube area to be blanked. Position the 'U' bolts (BB) around the radiant tube, through the clamp bridge (BC) and secure using with M8 nuts (BE).

Ensure that the distance between the 'U' bolts is approximately 1000mm for the 1250 blanking plate or 200mm for the 400 blanking plate.

The 'U' bolt assemblies should be positioned **perfectly square** to ensure that the blanking plate lies horizontal when fitted.

2.16.1.2 A retaining plate (BD) is positioned on the underside of the blanking plate (BN) at each 'U' bolt assembly position and secured using M8 nuts (BE) and washers (BF).

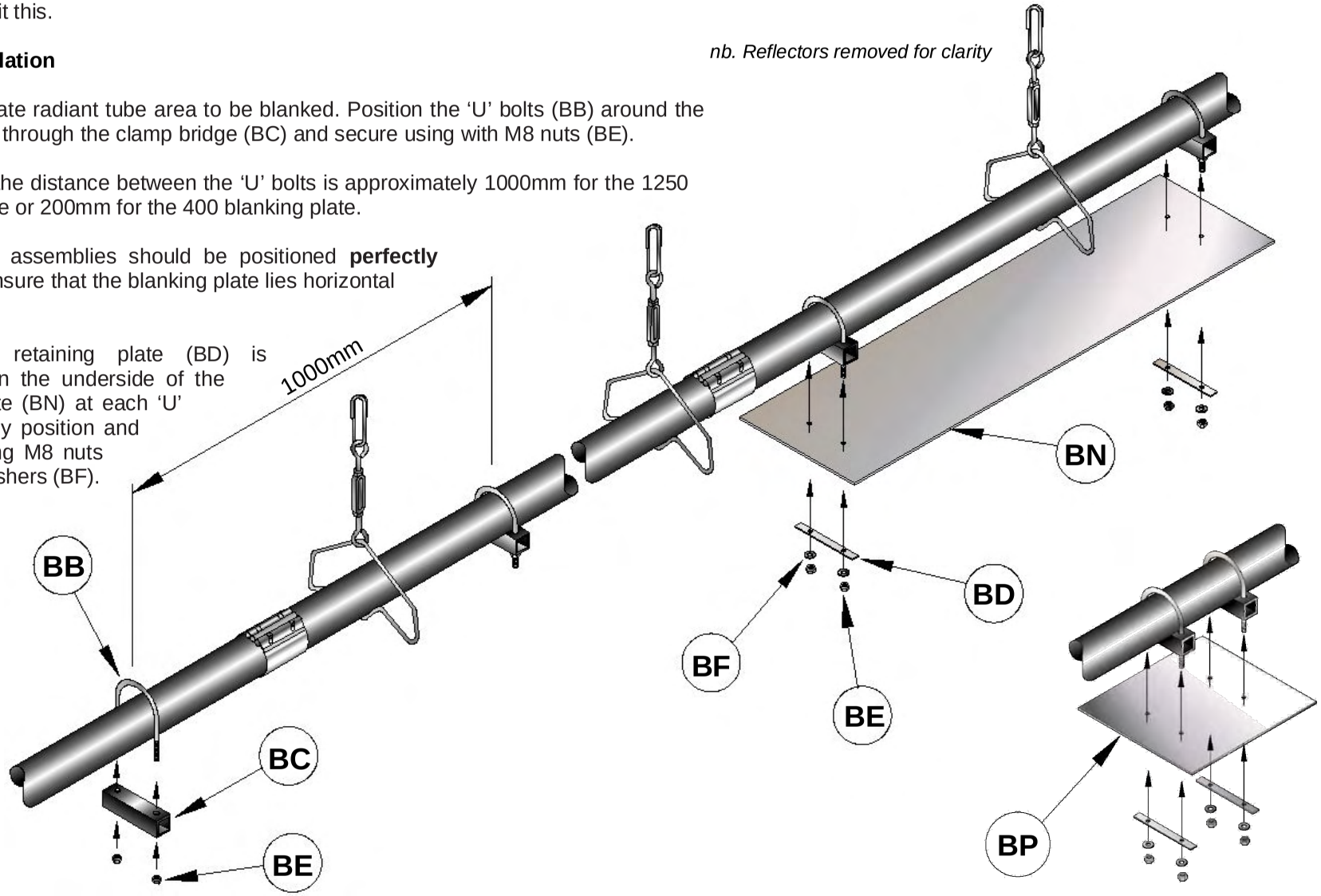

BB. 'U' Bolt - C110548; BC. Clamp Bridge - C110549; BD. Clamp Plate - C110449; BE. M8 Nut - 5441; BF. M8 Washer - 5445; BN. Blanking Shield 1250mm - L106020-1; BP. Alt Blanking Shield 400mm - L106020

An Undersheld Deflector (BR) is positioned beneath the radiant tube, usually at the first half of the firing leg (nearest the burner), although this can be positioned at any point if being used purely as a heat deflector for clearance purposes.

The oversized munsen rings (BQ) supplied will allow the undershield deflector to move with the expansion and contraction of the radiant tube.

2.17.1 Installation

Each undershield has two slots, 25mm in length at each end of the deflector. These slots are used to position the munsen rings apart. Mark the first point of the deflector on the radiant tube. Use the undershield (or a tape measure if required) to mark the second point.

2.17.1.1 The munsen rings (BQ) are supplied assembled. Using a flat head screwdriver remove both screws retaining the two parts together.

2.17.1.2 Offer one half, then the other onto the radiant tube at the first mark with the boss facing downwards. Replace the screws and tighten.

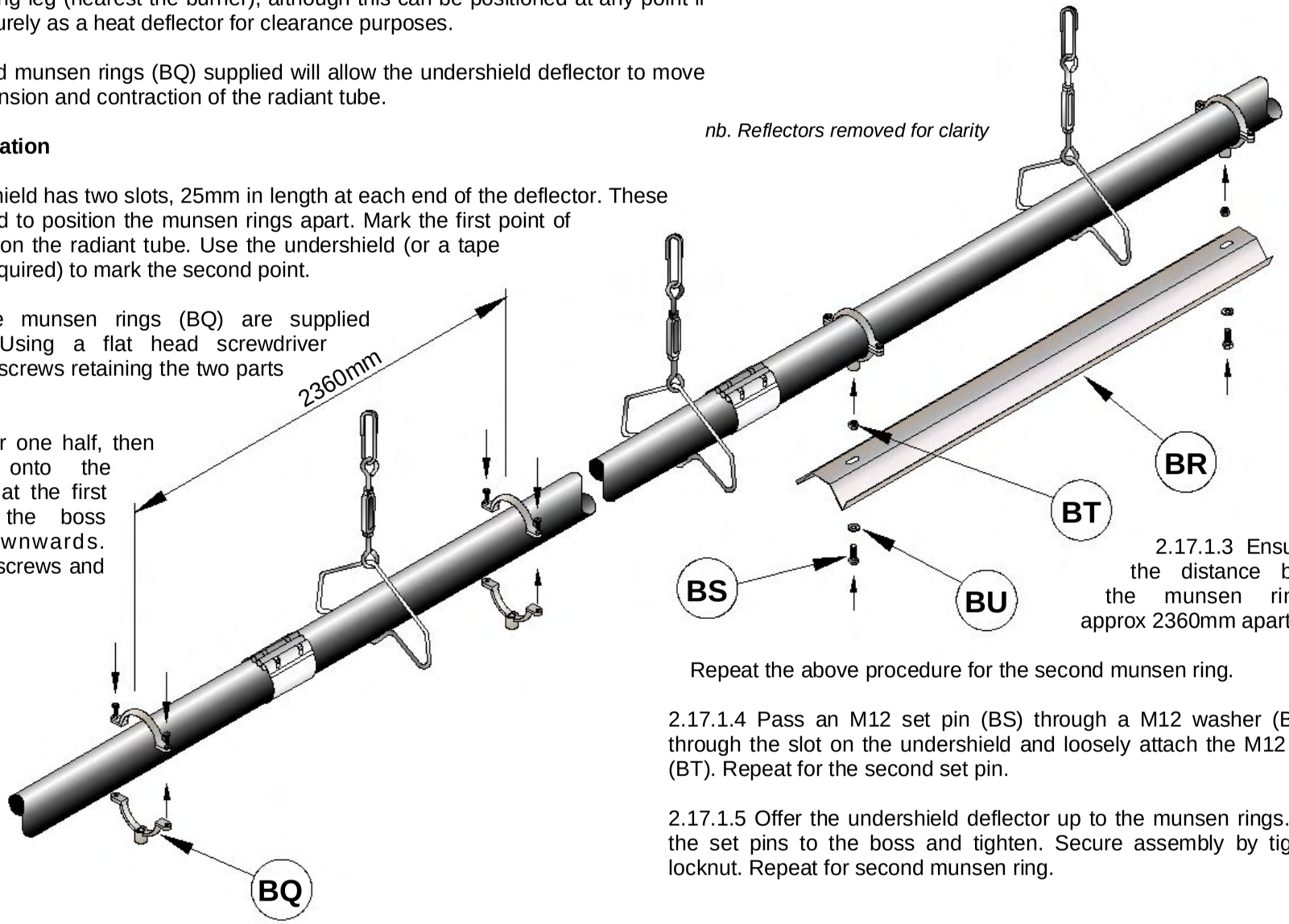

2.17.1.3 Ensure that the distance between the munsen rings is approx 2360mm apart.

Repeat the above procedure for the second munsen ring.

2.17.1.4 Pass an M12 set pin (BS) through a M12 washer (BU) and through the slot on the undershield and loosely attach the M12 locknut (BT). Repeat for the second set pin.

2.17.1.5 Offer the undershield deflector up to the munsen rings. Locate the set pins to the boss and tighten. Secure assembly by tightening locknut. Repeat for second munsen ring.

BQ. 100mm Munsen Rings - 6532; BR. Undershield 2440mm - 1350; BS. M12 x 50 Set Pin - 5501-1; BT. M12 Locknut - 5501

The Nor-Ray-Vac Acoustic enclosure reduces the noise from the Vacuum fan where it is mounted inside the working area and noise is an issue. It is constructed of noise reducing panels assembled to form a cube. The acoustic enclosure is weatherproof and thus can be externally located.

2.18.1 Dis-assembly

The acoustic enclosure is delivered pre-assembled so some dismantling will be required to assemble the fan motor and flue.

2.18.1.1 Remove 15 off M6 bolts and washers (CD) along the lid (CA) edge as indicated and withdraw lid assembly (CA)

2.18.1.2 Remove 13 off M6 bolts and washers (CD) along the bottom edge and side as indicated.

Remove side panel (CB)

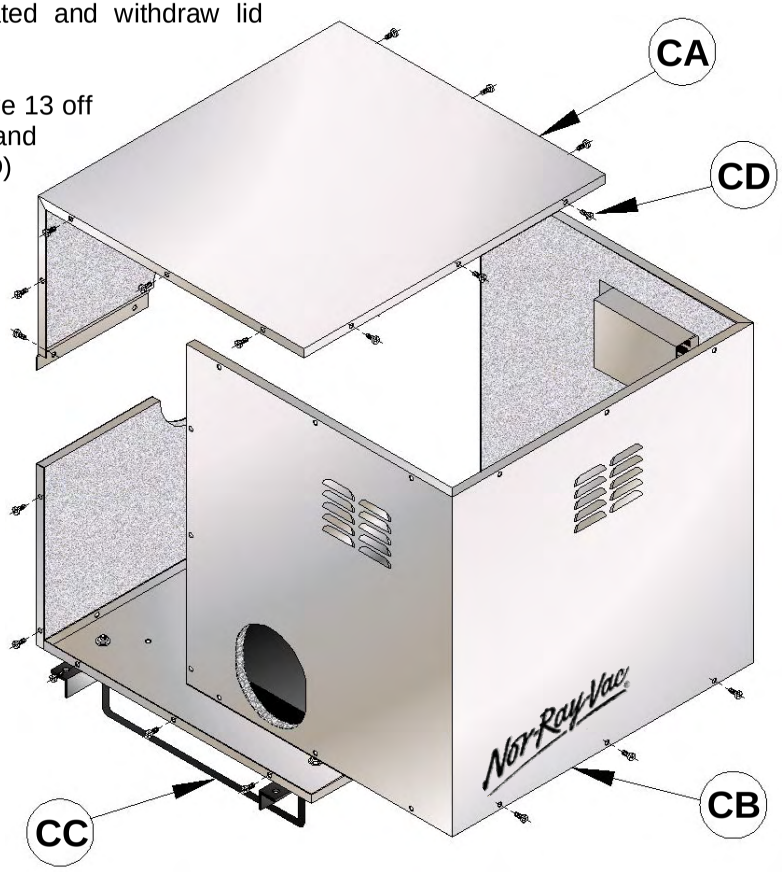

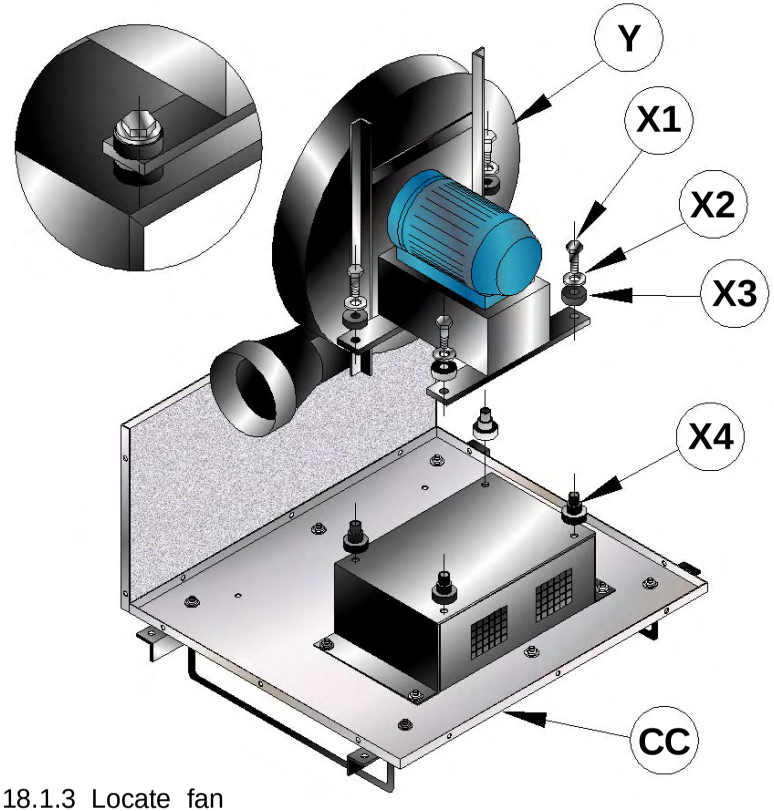

2.18.1.3 Locate fan assembly (Y) and position in correct orientation on fan stool located on base assembly (CC). Ensure anti-vibration mountings are used and secure using nuts and washers supplied.

Anti-vibration mountings are supplied as a kit of parts (X1 - X4).

CA. Lid Assembly - 201117; CB. Side Panel Assembly - 201115; CC. Base Assembly - L103075-SUB; CD. M6 x 16 Bolts and Washers - 5416 & 5425; X1-4 Anti-vibration Mount Kit - L103045-SUB; Y. Fan;

2.18.2 Re-assemble

2.18.2.1 Replace side panel (CB). Refit 13 off M6 bolts and washers (CD) along the bottom edge and side as indicated.

2.18.2.1 Replace lid (CA). Refit 15 off M6 bolts and washers (CD) along the lid edge as indicated.

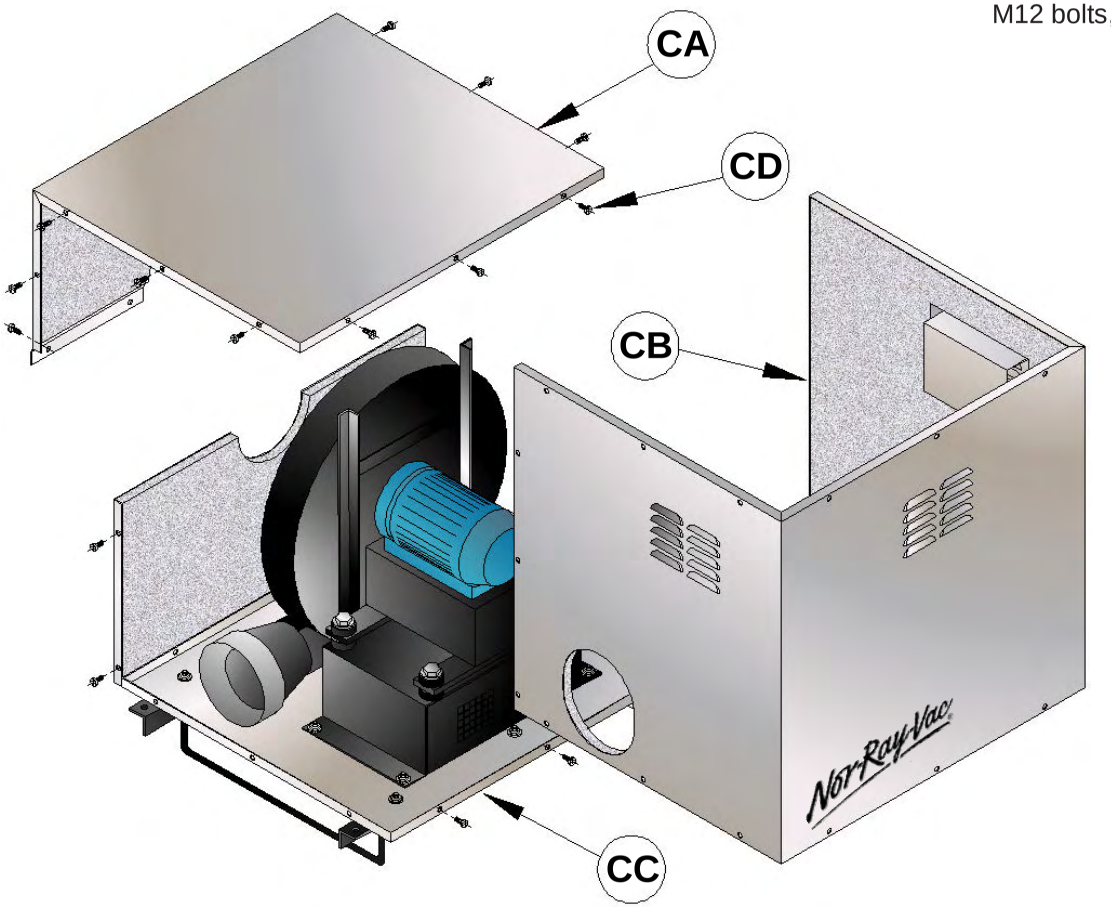

CA. Lid Assembly - 201117; CB. Side Panel Assembly - 201115; CC. Base Assembly - L103075-SUB; CD. M6 x 16 Bolts and Washers - 5416 & 5425; CE. 12MM All thread - (not supplied); CF. M12 Washers - (not supplied); CG. M12 Full Nuts - (not supplied)

2.18.3 Suspension instructions for acoustic enclosure

2.18.3.1 Suspension can be made from building steelwork using 12mm diameter drop-rods (not supplied) onto each hole of the base frame.

2.18.3.2 Alternatively, the base frame can be secured to suitable platform using M12 bolts, nuts and washers.

Dims: (hwd) 736x760x670mm

Weight: 25.0kgs (excluding Fan)

Part: L103101-SUB

The Nor-Ray-Vac Flue Silencer reduces the external break-out noise from the flue terminal. This is essential for systems installed adjacent to residential and educational areas. It is constructed of noise reducing baffles assembled in an enclosure.

2.19.1 Assembly

The flue silencer box has 150mm diameter spigots at either end, and can be fitted into the fan discharge flue, utilising standard 150mm diameter connectors supplied.

The flue silencer (CH) can be fitted in the horizontal or vertical sections of the flue.

2.19.2 Horizontal configuration.

2.19.2.1 Connect one side of the flue silencer (CH) to the expansion joint (T) by means of a jubilee clip (U). The other side of the flue silencer is connected to the flue via a tube coupler (G)

2.19.2.2 Support bracketing points are positioned along the length of the flue silencer box.

Dims:
(hwd) 300 x 450 x 300mm
ø150 spigots x 140 long,
brackets 50mm
tall.
Weight: 6.0kgs

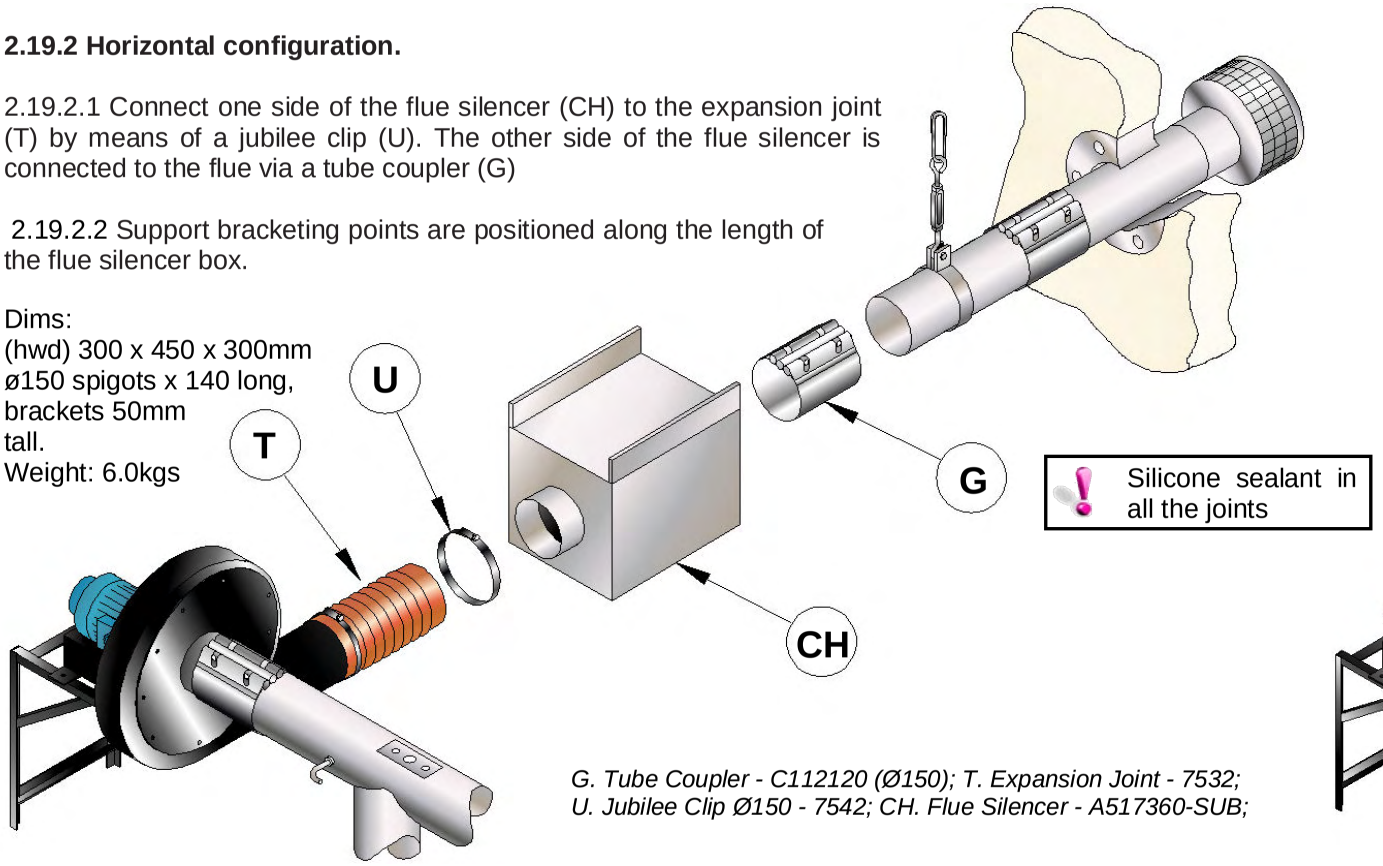

Silicone sealant in all the joints

2.19.3 Vertical configuration.

2.19.3.1 Connect the one side of the flue silencer (CH) to the flue by means of coupler (G). The other side of the flue silencer is connected to the remaining flue via a tube coupler (G)

2.19.3.2 Support bracketing points are positioned along the length of the flue silencer box.

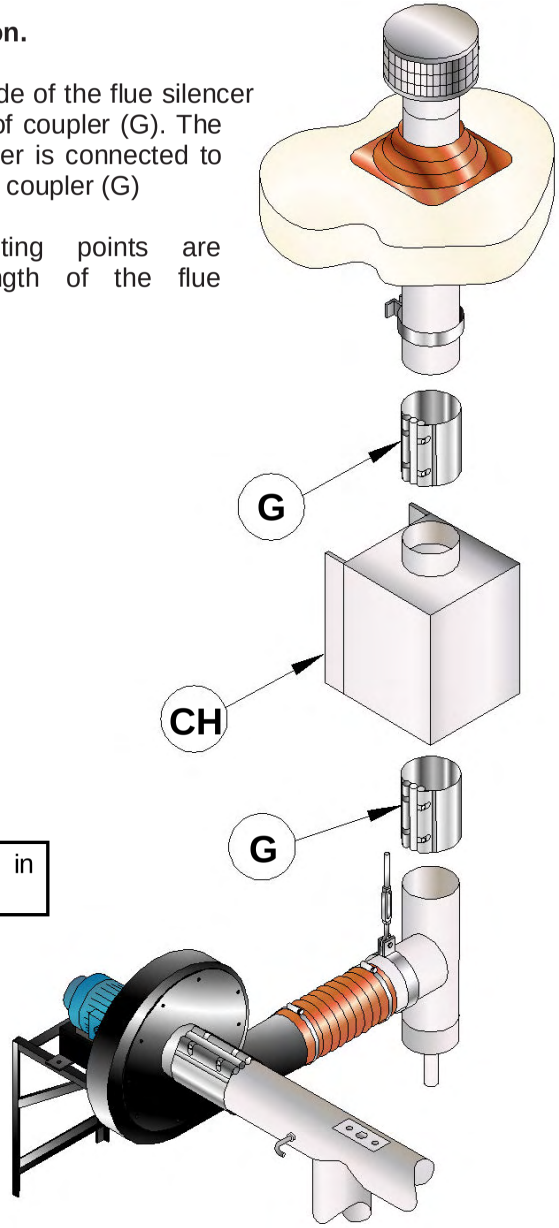

G. Tube Coupler - C112120 (Ø150); T. Expansion Joint - 7532;
U. Jubilee Clip Ø150 - 7542; CH. Flue Silencer - A517360-SUB;

The Nor-Ray-Vac Fan Motor Muff is ideal when the vacuum fan is mounted within a plant room or unused room to dampen down the fan motor noise. It is constructed of noise reducing panels assembled in an enclosure.

2.20.1 Assembly

2.20.1.1 Fit the motor muff (CJ), over the motor of the vacuum fan.

2.20.1.2 Fix the muff to the fan motor stool using 4 bolts (CK), nuts (CL) and washers (CM) as indicated.

Dims:
(hwd) L103053 - 300 x 370 x 320mm
(hwd) L103054 - 330 x 410 x 320mm
brackets 50mm
Weight:
8.0kgs

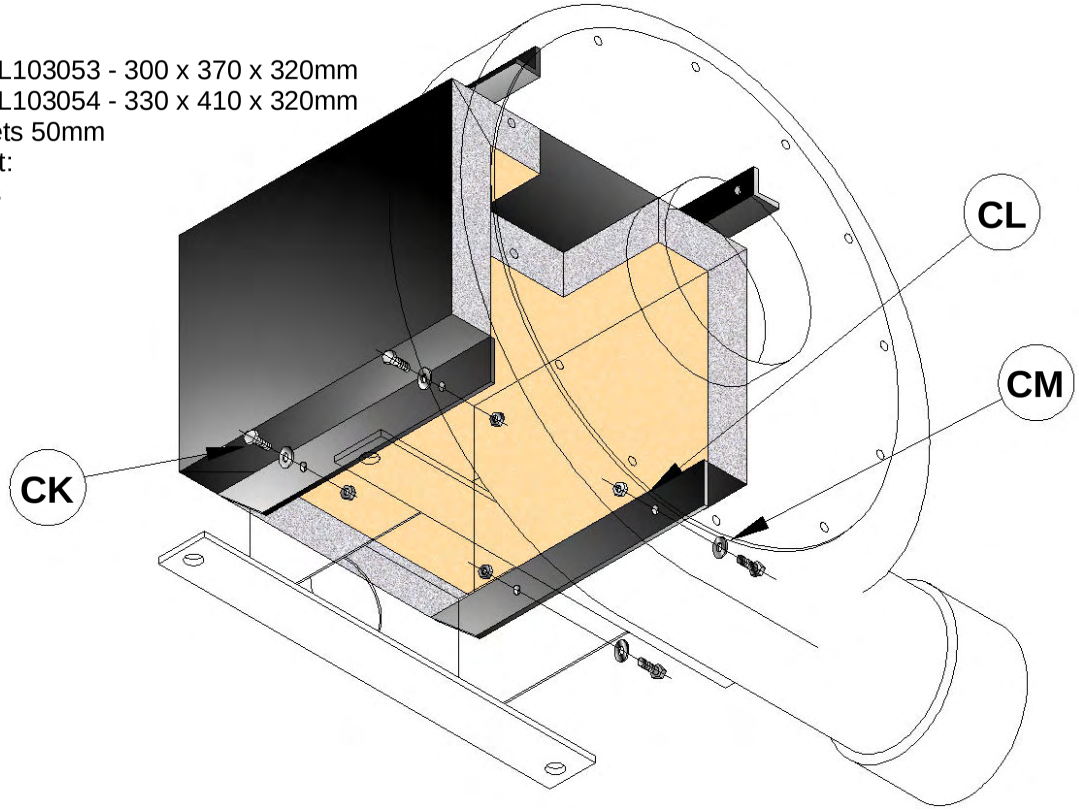

CJ. Motor Muff - L103053 (B80/B160/B300), L103054 (BH300); CK. M10 x 25 Set Pin - 5481; CL. M10 Nut - 5487; CM. M10 Washer - 5480

2.20.1.3 Fix the muff to the fan back bracket using 2 bolts (CK), nuts (CL) and washers (CM) as indicated.

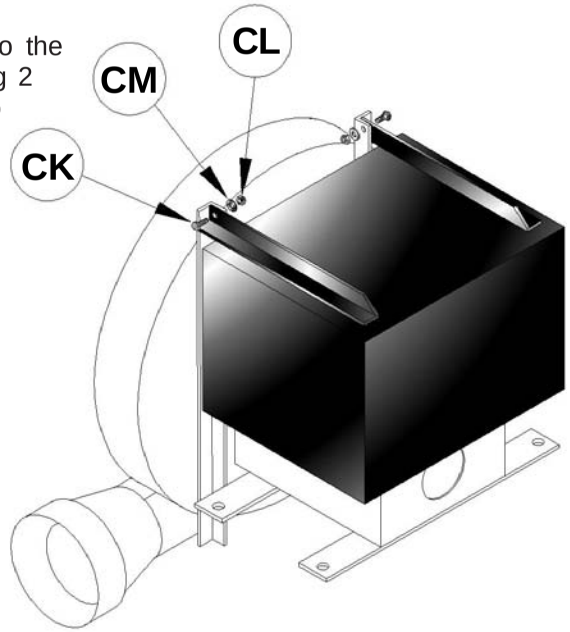

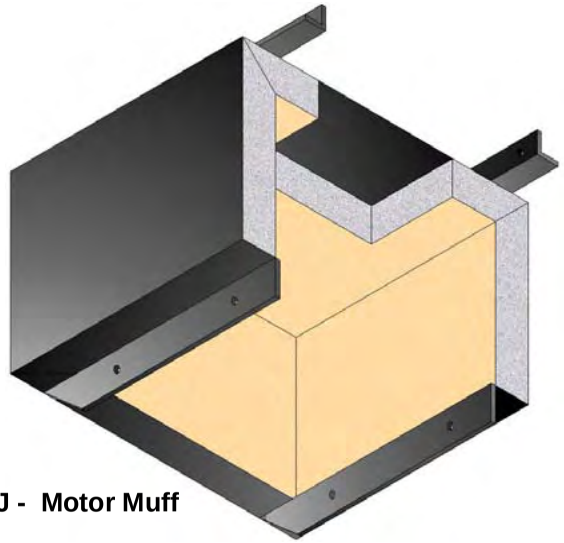

CJ - Motor Muff

The Nor-Ray-Vac End Vent Silencer - reduces the break out noise from the inrush of air into the combustion tube when installed within areas where noise is an issue. It is constructed of noise reducing panels assembled in an enclosure.

2.21.1 Assembly

2.21.1.1 Remove cover plate (AQ) of the end vent module by releasing the 2 set screws (AS).

2.21.1.2 Offer the silencer (CN), up to the cover plate of the end vent module and attach by fixing the 4 set screws (CP) and washers (CR) to the hank bushes in the end of the silencer box.

2.21.1.3 Re-attach the cover plate (AQ) to the end vent module and fix in position using the 2 set screws (AS).

Dims:

(hwd) □130 x 195mm long
Weight: 4.0kgs

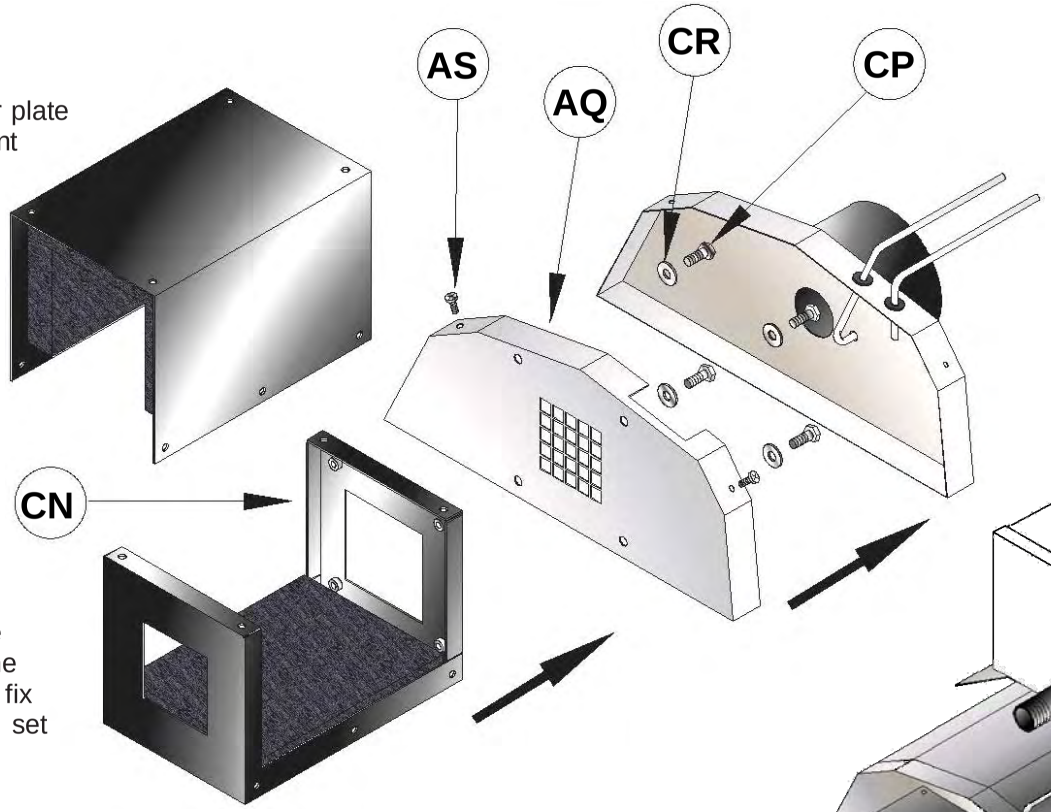

Assembled EVM Silencer

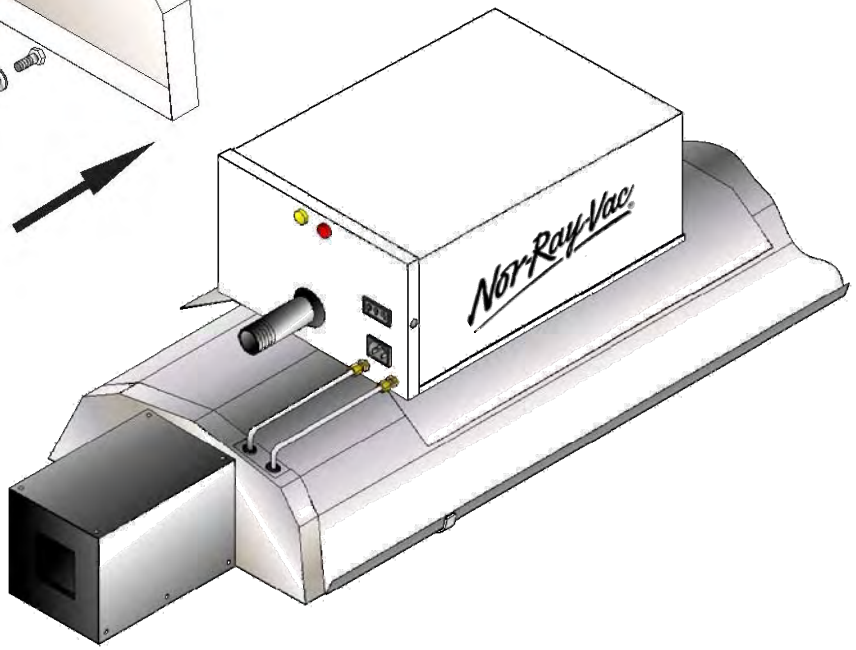

AQ. EVM Outer Plate; AS. EVM Fastener; CN. EVM Silencer - L104051-SUB; CP. M6 x 12mm Set Pin - 5417-1; CR. M6 Washer - 5405

3. Commissioning Instructions.

These appliances should be commissioned by a qualified engineer.

3.1 Tools Required.

The following tools and equipment are advisable to complete the tasks laid out in this manual.

Suitable alternative tools may be used.

Various Pozidrive Screwdrivers

Various Flat Head Screwdrivers

Manometer

Spanner Set

Allen Key set

3.2 General.

Under normal working conditions it is recommended that the Nor-Ray-Vac 'LR' series system is regularly maintained to ensure long life and efficient operation.

Maintenance is required only once per year.

In dusty or dirty conditions more frequent maintenance is desirable. Servicing work must be carried out by a qualified gas service engineer.

Important

When maintaining or servicing the Nor-Ray-Vac 'LR' series systems:

- Never rest anything, especially ladders against heating system.
- Isolate gas and electrical supplies before commencing any service work.

3.3 Commissioning Procedure

3.3.1 Start Up Checks

3.3.1.1 Check that the installation is to the design layout drawing and installed in accordance with the installation instructions.

3.3.1.2 Check installation electrically. Ensure that the vacuum fan, inverter, burners and control panel are wired correctly to diagrams provided.

3.3.1.3 Ensure that each burner is electrically disconnected at the plug/socket.

3.3.1.4 Set individual burner delay timer dip-switches (located in each burner) to required setting. **Refer to section 3.3.1.8**

3.3.1.5 Check gas is turned on at meter and take meter gas pressure reading.

Fit pressure manometer to the inlet pressure test point on the burner ***furthest from the gas supply*** and with all burners off observe pressure reading. Turn off gas at meter and again observe reading. If pressure falls check system for leaks.

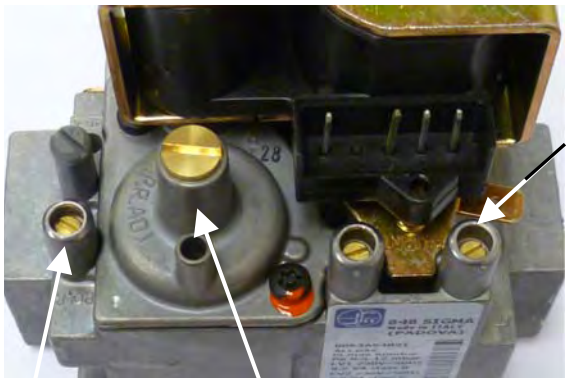

The gas pressure at the burner inlet connection must not exceed 50 mbar (20in wg).

3.3.1.6 Start the vacuum fan.

For various controllers/BMS systems it may be necessary to adjust the set point to above room temperature.

For B80/B160 and B300 fans with an inverter panel, check that the display states "rdy" (ready)

3.3.1.7 Check for correct fan rotation.

3.3.1.8 Burner Timer Dip-switch Adjustment

Each burner is fitted with an adjustable burner delay timer. The timer is adjusted using dip-switches located on top of the timer casing.

The dip-switches are labelled 1, 2, 3 and 4. These numbers correspond to the burner positions within the radiant branch.

The burner located ***nearest*** to the exhaust fan in that branch is noted as Burner 1, this is the case irrespective of how many other burners are in that branch.
The burner directly ***behind*** burner 1 is always noted as Burner 2, the burner directly ***behind*** Burner 2 is Burner 3 and so on finishing at the End Vent Burner.

Set the burner timer dip-switch.
For example, the timer on burner 1 is set by sliding the white dip-switch, positioned above the number 1, towards the number. The timer on burner 2 is set by sliding the white dip-switch, positioned above the number 2, towards the number.

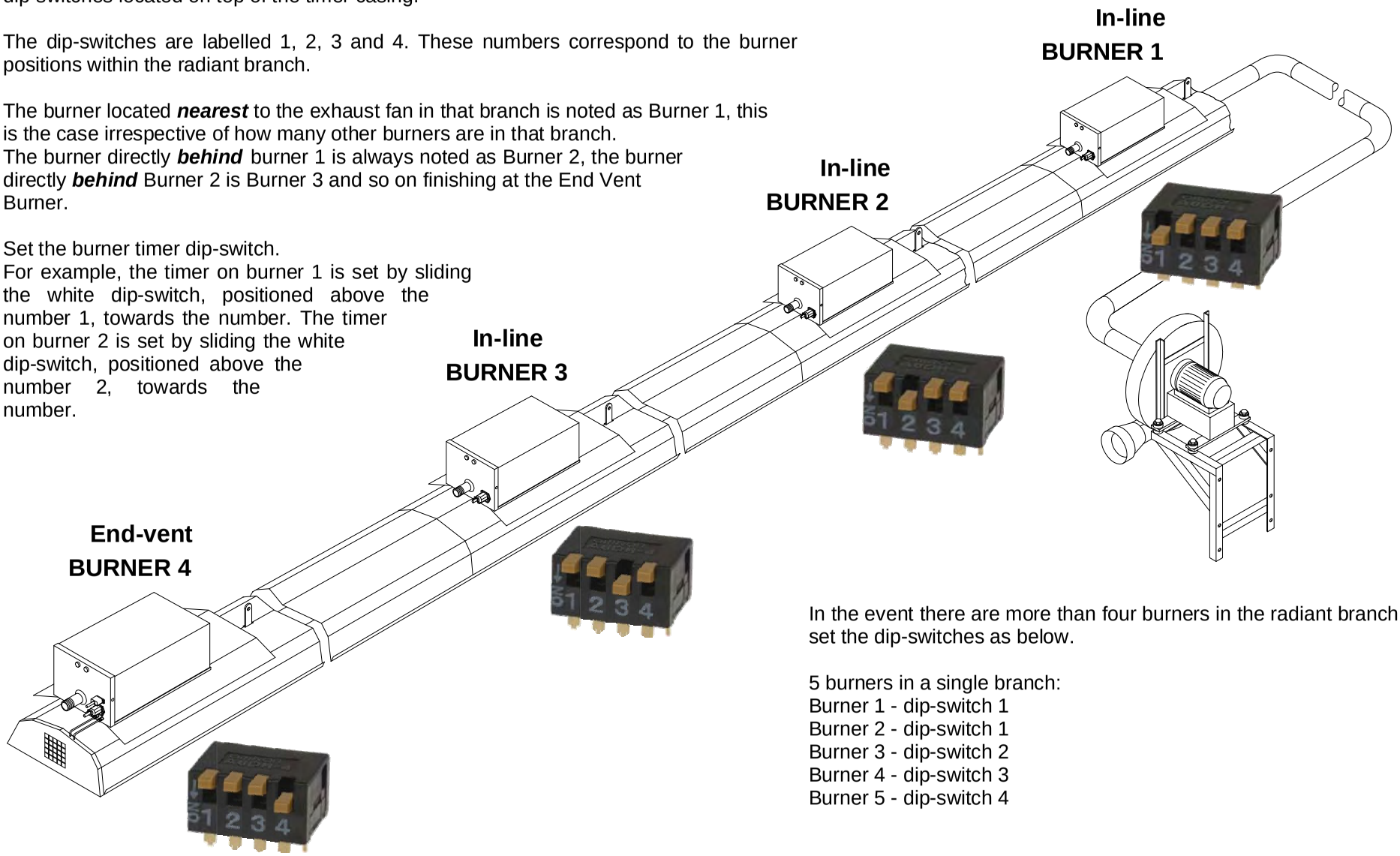

In the event there are more than four burners in the radiant branch, set the dip-switches as below.

5 burners in a single branch:
Burner 1 - dip-switch 1
Burner 2 - dip-switch 1
Burner 3 - dip-switch 2
Burner 4 - dip-switch 3
Burner 5 - dip-switch 4

3.3.1.9 Adjust the vacuum setting

The end vent vacuum is measured by removing the protection cap on the tee piece in the air impulse line on the end vent burner and connecting a manometer.

3.4 B80/B160 and B300 fans ONLY

The use of an inverter on the standard B80, B160, B300 fan system allows the end vent suction to be adjusted by varying the low speed setting of the inverter within the local relay unit.

3.4.1 Ensure that electrical supply to the end vent modules and burners in each branch are connected.

3.4.2 Check that the fan and branch dampers are fully open and secure.

3.4.3 Ensure the controller is in a programmed ON function and above the actual room temperature.

3.4.4 After a 30s delay the fan should run and the inverter should be showing the motor frequency in the display.

3.4.5 Press the mode button 3 times until 'COnF' appears on the display.

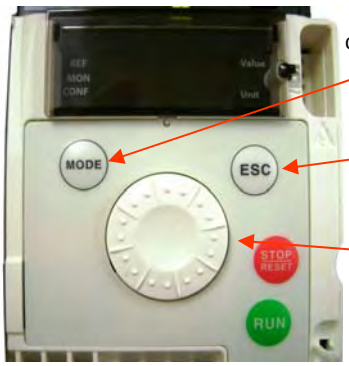

Mode button: Switches between control/program modes. (Only accessible with door open).

Escape button: Exits a menu or parameter.

Jog dial: For navigation when turned clockwise or anticlockwise, or selection/validation when pressed.

3.4.6 Press the jog dial to enter. Rotate jog dial until 'LSP' is displayed. Press jog dial to enter.

3.4.7 Rotate jog dial to adjust frequency. Press jog dial to enter new value, causing the inverter to change its speed.

3.4.8 Adjust the frequency until each burner has lit.

Frequency is usually between 35 and 50 (Hz)

3.4.9 Press the ESC button twice to return the inverter to the 'rdY' display.

3.4.10 Remove power to the system and allow fan to halt.

3.4.11 Return power to system. After a 30s delay the fan should run and a red neon should have illuminated on the rear of each burner.

3.4.12 Working at the radiant branch ***FURTHEST AWAY*** from the fan, observe the ignition of the burners. An amber neon should illuminate on the rear of the burner.

3.4.13 If the dip-switches have been set correctly, the burner closest to the manifold (last on branch) should ignite first followed in order by every burner towards the end vent burner.

Note: It may be necessary to temporarily break the union at a burner in order to purge the gas pipe of air.

When the branch has been running for 30 minutes check the end vent vacuum reading.

3.4.14 Re-adjust the frequency on the inverter (if necessary) until the appropriate end vent suction is achieved, this is given in the table below.

System	End vent pressure mbar
Standard multi-burner systems	6.25
Special considerations	
Single 32LR End vent only	7.5
Single 38LR End vent only	8.25
Single 46LR End vent only	9.25
Three 46LR in a single branch	5.6

3.4.15 Proceed to the next radiant branch closer to the fan and commission in the same manner, observing the ignition sequence of the burners and amber neon's.

3.4.16 Check the end vent vacuum reading.

3.4.17 Adjust the branch damper (if necessary) located at the end of the branch to bring the vacuum readings in line with the normal operating figure shown in the chart. Ensure that damper is locked securely after adjustment.

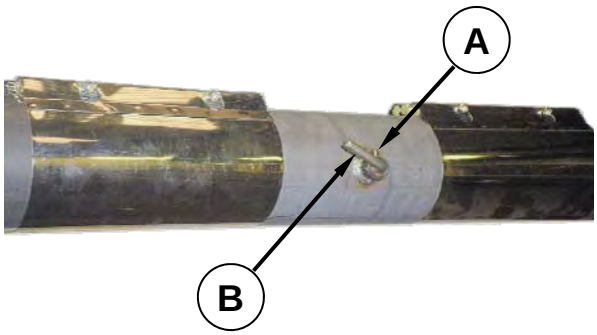

Adjustment instruction for branch damper.
1 Loosen grub screw (A).
2 Turn adjustment lever (B).
3 Position of damper blade is indicated by position of bent adjustment lever.
4 Tighten grub screw (A) to secure damper position.

3.4.18 Repeat for any further branches (where necessary), moving closer to the fan as each branch is completed.

The vacuum setting procedure is now complete.

3.5 BH300 fans ONLY
(and fans controlled by NRV 'logic' driven LRU's with no inverter)

End vent vacuum settings are made firstly by means of adjusting the damper at the vacuum fan inlet, this brings the end vent with the lowest reading to the normal operating vacuum.

The dampers on each branch can then be adjusted to bring the vacuum readings in other branches to the normal operating figure.

Ensure that all dampers are locked securely after adjustment.

3.5.1 Ensure that each burner is electrically disconnected at the end vent module plug/ socket.

3.5.2 Check vacuum fan inlet and branch dampers are fully open in the first instance and secure.

3.5.3 Ensure the controller is in a programmed ON and above the actual room temperature.

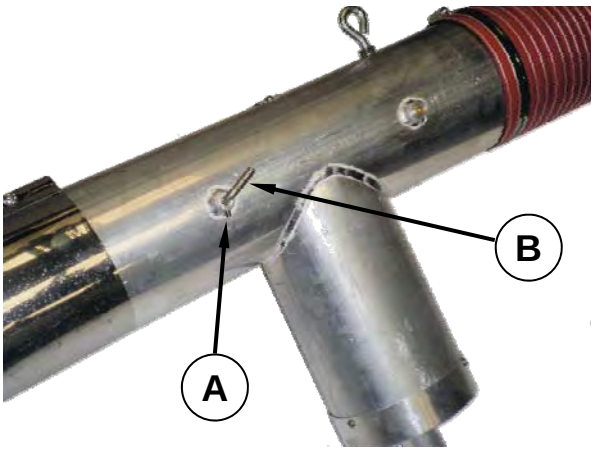

The fan inlet damper is integral to the fan inlet condensate tee piece.
1 Loosen grub screw (A).
2 Turn adjustment lever (B).
3 Position of the damper blade is indicated by position of bent adjustment lever.
4 Tighten grub screw (A) to secure damper position when finished.

3.5.4 After a 30s delay the fan should run.

3.5.5 Working at the end vent burner ***FURTHEST AWAY*** from the fan, measure the vacuum pressure and adjust the **fan inlet damper** to obtain over 8.7 - 10 mbar (above 3.6in wg) **WHEN COLD**.

3.5.6 Remove power to the system and allow fan to halt.

3.5.7 Ensure that each burner is electrically re-connected at the end vent module plug/ socket.

3.5.8 Return power to system. After a 30s delay the fan should run and a red neon should have illuminated on the rear of each burner.

3.5.9 Working once more at the radiant branch ***FURTHEST AWAY*** from the fan, observe the ignition of the burners. An amber neon should illuminate on the rear of the burner.

3.5.10 If the dip-switches have been set correctly, the burner closest to the manifold (last on branch) should ignite first followed in order by every burner towards the end vent burner.

Note: It may be necessary to temporarily break the union at a burner in order to purge the gas pipe of air.

Allow the branch to run for 30 minutes.

3.5.11 Recheck the end vent burner ***FURTHEST AWAY*** from the fan, measure the vacuum pressure. Adjust the **branch damper (if necessary)** to obtain the figure shown in the table below.

System	End vent pressure mbar
Standard multi-burner systems	6.25
Special considerations	
Single 32LR End vent only	7.5
Single 38LR End vent only	8.25
Single 46LR End vent only	9.25
Three 46LR in a single branch	5.6

3.5.12 Repeat for any further branches (where necessary), moving closer to the fan as each branch is completed.

The vacuum setting procedure is now complete.

3.6 Final Commissioning.

3.6.1 Check that the burner injector pressures are zero ± 0.25 mbar (±0.1in wg). Adjust if necessary.

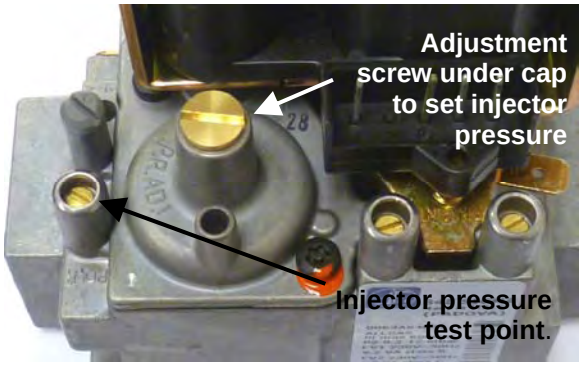

3.6.2 Check operation of thermostat controllers a number of times, allowing the burner ignition cycle to complete each time, checking that each burner relights.

3.6.3 With all burners firing check the inlet gas pressure at the burner furthest away from the gas supply.

The minimum inlet pressure is 17.5mbar for G20 (Nat Gas), 20mbar for G25 (Nat Gas) and G31 (Propane) and 25mbar for G30 (Butane).

The difference between gas pressure at the burner, with all the burners on and all the burners off should not be more than 2.5 mbar (1in wg).

3.6.4 Take gas consumption meter readings for each separate NRV system or building heated ensuring all other loads are off.

3.6.5 After the system has reached equilibrium: take the following measurements.

a The flue gas temperatures entering the vacuum fan. The flue gas sample point located on the vacuum fan tee is used.

b The surface temperature of the underside of the tube at the end of each radiant branch.

c The surface temperature of the underside of the tube at a point directly underneath each combustion chamber suspension lug.

3.6.6 Reset thermostat controllers to required setting.

3.6.7 Complete service report sheet.

3.7 Typical Unequally Balanced System Layout

System	End vent Pressure mbar
Standard systems - shown	6.25
Special considerations	
Single 32LR End vent only	7.5
Single 38LR End vent only	8.25
Single 46LR End vent only	9.25
Three 46LR in a single branch	5.6

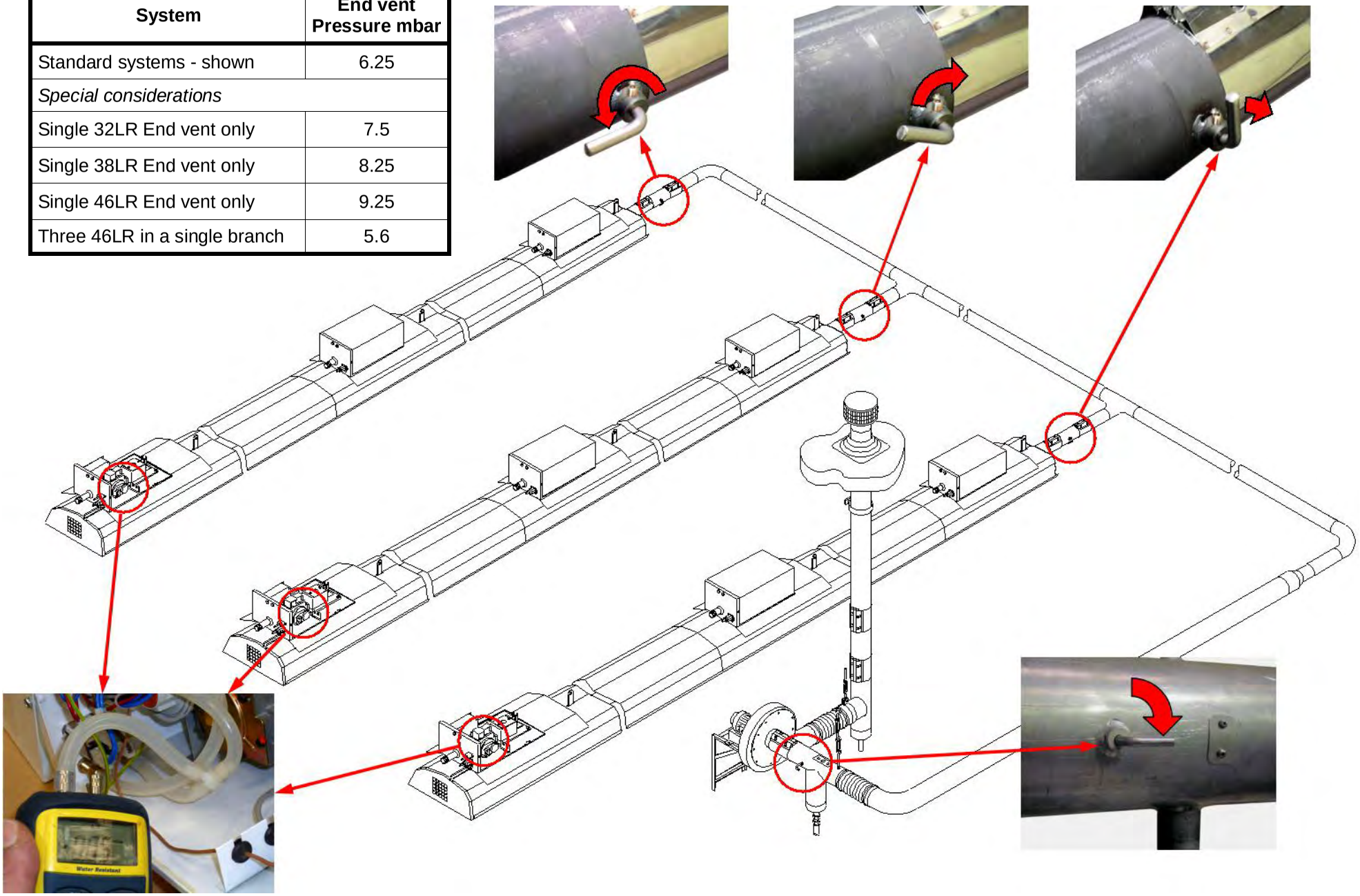

4. Servicing Instructions.

These appliances should be serviced annually by a competent person to ensure safe and efficient operation. In exceptional dusty or polluted conditions more frequent servicing may be required.
The manufacturer offers a maintenance service. Details available on request

4.1 Tools Required.

Suitable alternative tools may be used.

The following tools and equipment are advisable to complete the tasks laid out in this manual.

Leather Faced Gloves

Various Pozidrive Screwdrivers

Various Flat Head Screwdrivers

Large Adjustable Spanners or 22, 26 & 27mm Spanners for Gas Flex.

Spanner Set

Allen Key set

Soft Brush

4.2 Burner Exploded Views.

Figure 6.a. LR Burner Head

6 Burner head casting – L100103-SUB
7 Burner port insert – L100155
8a Flame retention grid – L100171
8b Flame retention mesh – L100177
8c Flame retention plate – L100176
9 Air shutter plate - see selection chart
10 Burner jet - see selection chart
11 Electrode assembly – L100401
23 ½" plug – L100202
37 Set pin M4 x 6 – 5326-1

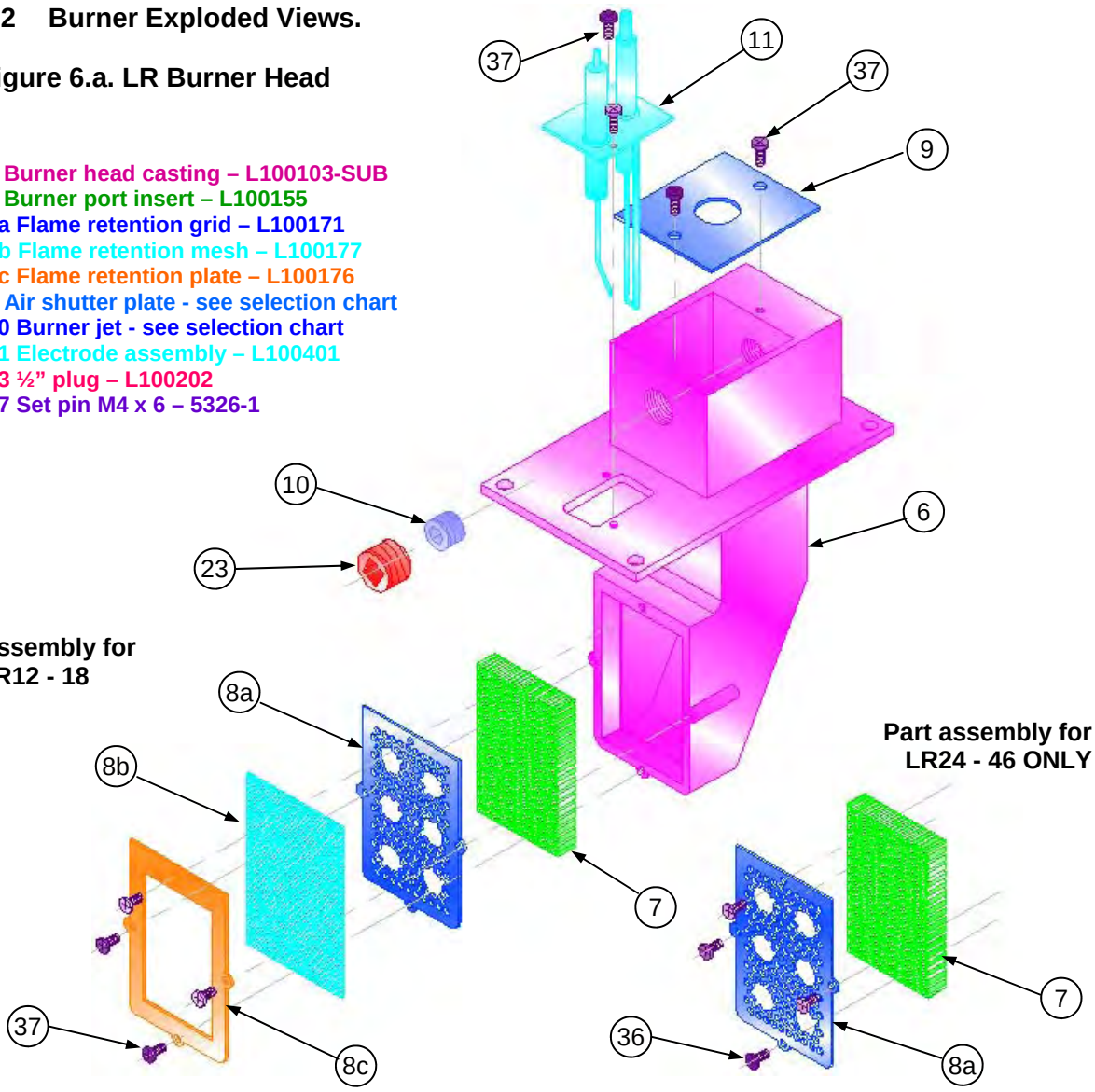

Figure 6.b. LR Burner

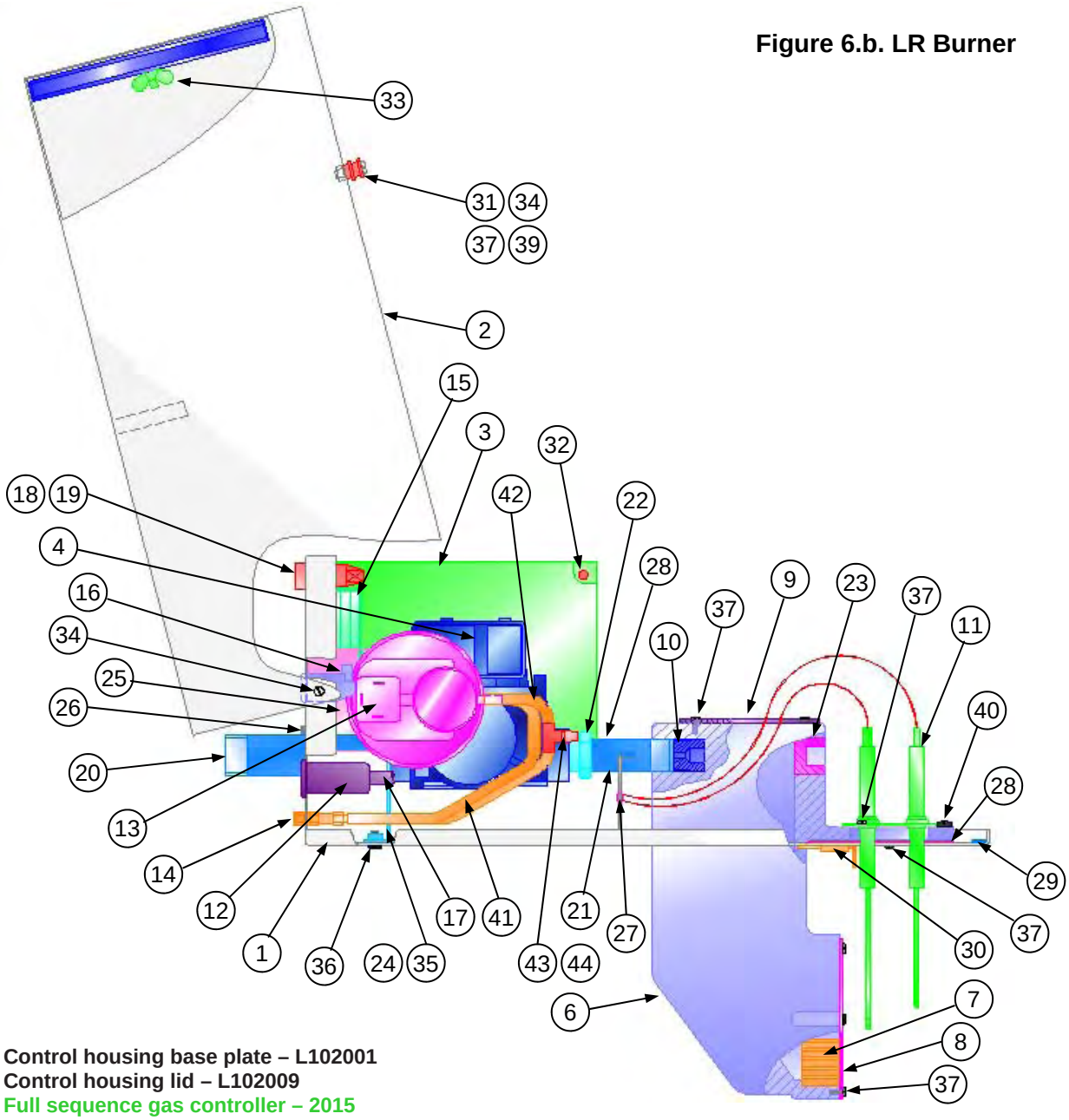

1 Control housing base plate – L102001
2 Control housing lid – L102009
3 Full sequence gas controller – 2015
4 Multi functional gas valve – C111513 plus 900041
5 Air filter – L102013
6 Burner head casting – L100103-SUB
7 Burner port insert – L100155
8 Flame retention grid – L100171
9 Air shutter plate - see selection chart
10 Burner jet - see selection chart
11 Electrode assembly – L100401
12 Mains input filter – 201292
Mains lead (*not shown*) – 2125
13 Air pressure switch (EV only) – L104039
14 Bulkhead compression fitting (EV only) – L104073
15 Delay timer – L102025-SUB
16 Inline Socket *(EV only)* – 3123-5
Inline burner plug *(EV only - not shown)* – 3124
17 Wiring harness – E200067
18 Red neon light – 2180
19 Amber neon light – 2175
20 Gas inlet connection pipe ½" x 4" – 2360
21 Gas outlet inlet connection pipe ⅜" x 2½" – 2314-1
22 ½" x ⅜" reducing bush – 2320
23 ½" plug – L100202
24 Valve mounting bracket – L102020
25 Pressure switch bracket – L200025
26 Grommet (gas supply) – B200500
27 Grommet (13mm) – 2878
28 Burner gasket – L102032
29 Silicone gasket – L102031
30 Slide latch – L100200
31 Latch clip – L100201
32 Push clip – C110714
33 Wing nut – C111700
34 Set pin M4 x 12 – 5325
35 Set pin M4 x 10 – 5314
36 Set pin M5 x 10 – 5363
37 Set pin M4 x 6 – 5326-1
38 Washer M4 – 5322
39 Nut M4 – 5315
40 Torque Screw - 201093
41 Silicone tubing *(EV only)* – L100180-SUB
42 Silicone tubing *(EV only)* – L100181-SUB
43 Plastic tee *(EV only)* – L104200
44 Tee cap *(EV only)* – L104201

4.3 Vacuum fan

Inspect fan and flue ductwork for any contamination.

Inspect expansion joints for damage and replace if necessary.

4.4 Tubes

Inspect radiant tubes and fittings internally. If there is any appreciable build up of dust or deposits the tubes should be cleaned internally.

If corrosion is present replace as necessary.

Note It may be necessary to determine whether chlorinated hydrocarbons are being used by the client.

4.5 Tube couplers

Check for tightness.
Inspect for evidence of holes and cracks and replace if necessary.

4.6 Reflectors

Check for overlaps and re-adjust if necessary.
The reflectors may be cleaned with a soft cloth and detergent in water.

4.7 Condensate trap

Inspect for dirt and scale and clean if necessary.

4.8 Burner electrodes

Check ceramic visually for build up of carbon or cracks.
Check the spark distance and position of the electrodes relative to the burner head, replace if necessary (see fig.7).

4.9 Burner head

Check condition of burner head insert and flame retention grid and replace if necessary.

4.10 Filter

Replace if contaminated with dirt.

4.11 Combustion Chamber Viewing Window

Window should be clean and free from cracks.
Replace if necessary.

Re-commission system after servicing (see section.3)

Figure 7.
Burner Electrode Details

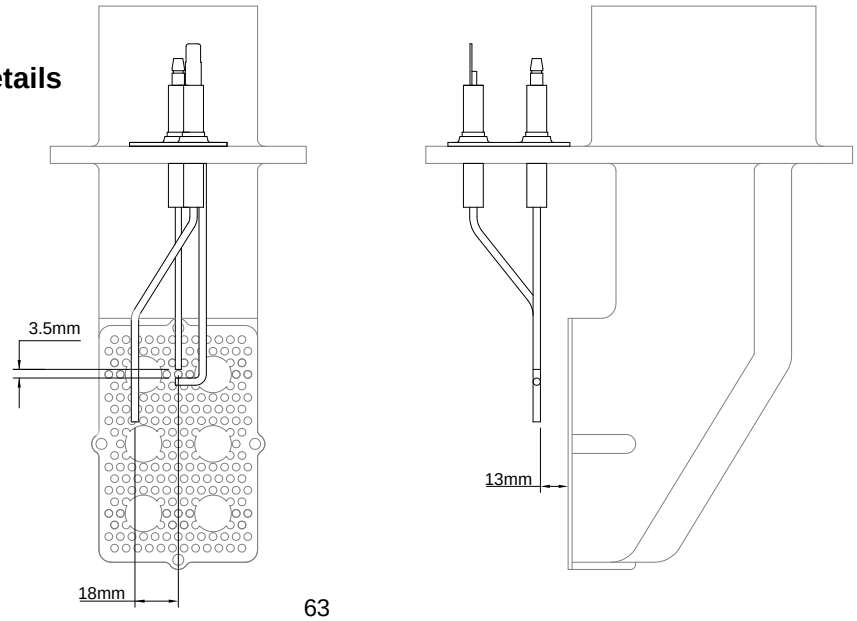

5. Spare Parts.

Required Spares

In order to aid troubleshooting and servicing we recommend that the components shown in this section should be stocked.

Note Any spare part components that are not approved by AmbiRad could invalidate the approval of the appliance and validity of the warranty.

Item	Description	Part No.	Item	Description	Part No.
	Ignition Controller	2015		Pressure Switch	L104039
	Nat Gas Valve Twin Solenoid 220/240	C111513		Amber Neon (Burner On)	2175
	Valve Mini Harness	900041		Red Neon (Mains On)	2180
	Mains Input EMC Filter	201292		Inline Burner Socket	3123-5
	Ignitor Assembly	L100401		Inline Burner Plug	3124
	HT Spark Lead	2243-1		Vacuum Test Nipple	L104200
	Rectification Lead	2243-2		Burner Timer	L102026
	Mains Input Cable	2125		Main Harness End Vent In-line	E200067 E200068
	Burner Air Filter	L102013		Lockout Relay	2104
	Webber Valve	2197		Lockout Relay Base	2108

Item	Description	Part No.	Item	Description	Part No.
	Burner Gasket	L102032		Burner Head Assembly LR12-18 LR24-46	 L100102-SUB12-18 L100102-SUB
	Ceramic Insert	L100155		Flame Retention Grid LR12-18 LR24-46	 L100175-SUB L100171
	Mica Window	A523500		Sight Glass Cover	A571202
	Window Gasket	C110350		End Vent Module	EVM
	Fan B80 B160 B300	 201760 201761 201762		Inverter 1.5kW B80/B160 2.2kW B300	 900088 900089
	Fan BH300	201763		Contactor/O'load BH300	 900088
	100mm (4") Tube Coupler	C112110		Fan Expansion Joint	7532
	150mm (6") Tube Coupler	C112120		Jubilee Clip	7542
	Combustion Chamber	L101020-SUB		Suspension Bracket	C110500-SUB
	Combustion Chamber Reflector	L105050		Reflector Support Bracket	L201008-SUB
	Standard Reflector	L105024		Speedlinks	6524

NRV LR Injector/Air Shutter selection chart

Gas	Burner	 Jet Size dia mm Part number		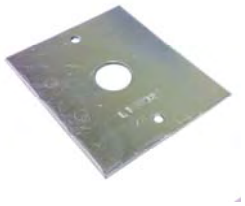 Sutter Size dia mm Part number		 EVM Orifice Plate dia mm Part number	
Natural G20	12	3.6	L100336	13	L100322	14.5	L104102
	18	4.4	L100544	17	L100321	16	L104101
	24	4.9	L100549	19.5	L100320	24	L104100
	32	5.4	L100554	22	L100314	27	L104093
	38	5.8	L100558	24	L100316	32	L104092
	46	6.3	L100563	26.5	L100318	-	-
Natural G25	12	3.7	L100537	13	L100322	14.5	L104102
	18	4.6	L100546	17	L100321	16	L104101
	24	5.2	L100552	19.5	L100320	24	L104100
	32	5.8	L100558	22	L100314	27	L104093
	38	6.3	L100563	24	L100316	32	L104092
	46	6.9	L100569	26.5	L100318	-	-
Butane G30	12	2.6	L100526	13	L100322	14.5	L104102
	18	3.2	L100532	17	L100321	16	L104101
	24	3.7	L100537	19.5	L100320	24	L104100
	32	4.2	L100542	22	L100314	27	L104093
	38	4.6	L100546	24	L100316	32	L104092
	46	5.1	L100551	26.5	L100318	-	-
Propane G31	12	2.9	L100529	13	L100322	14.5	L104102
	18	3.5	L100535	17	L100321	16	L104101
	24	4.0	L100540	19.5	L100320	24	L104100
	32	4.4	L100544	22	L100314	27	L104093
	38	4.8	L100548	24	L100316	32	L104092
	46	5.2	L100552	26.5	L100318	-	-

6. Fault Finding Guide.

Symptoms	Possible causes	Remedy
Vacuum fan is running but there is no power at burner. Neon lights are off.	Thermostat is satisfied.	Check to see that thermostat is calling for heat.
	No power at burner.	Check for 240V supply.
	Blown fuse in supply to heater.	Check and replace if necessary.
	End vent vacuum too low.	Vacuum at end vent should be 6.25 mbar (2.5in wg). Check for air leaks on burner.
	Air pressure switch on end vent burner not opening.	Check and replace if necessary.
	3 way air valve (if fitted) in end vent burner not opening.	Check and replace if necessary.
	No power out from end vent burner.	Check for loose or broken wire or faulty relay.
Red neon comes on but ignition sequence does not start and amber neon remains off.	Loose or broken leads to full sequence gas controller.	Check and repair.
	Fault in full sequence gas controller.	Replace.
Red neon comes on. Amber neon comes on for ignition period; then amber neon goes off.	No ignition spark.	Check for loose or broken high tension lead to spark electrode. Check spark gap and position for spark electrode Check ceramic is not cracked. Check for loose earth wire connection on full sequence gas controller.
	Fault in full sequence gas controller.	Replace.
	Insufficient gas supply to burner.	Check service cock is open and gas pressure is available at inlet to gas valve.
	Gas solenoid valve not opening.	Check for loose or broken wires to the gas valve. Check for adequate end vent vacuum. Replace valve if necessary.
	Injector pressure not set at zero.	Check and adjust.
	Incorrect aeration.	Check that air shutter plate on mixing chamber is correctly positioned.
Red neon comes on. Amber neon comes on for ignition period, burner lights for a short time and then goes out. Amber neon off.	Flame probe faulty or lead detached.	Check for broken ceramic. Check for correct position of flame probe.
	Fault in sequence gas controller.	Measure flame current. The minimum signal is 3µA (DC).
	Polarity of line and neutral incorrect.	Check for correct polarity of the electrical supply.
	Burner earth is poor.	Check and ensure burner is correctly earthed.
	Full sequence gas controller faulty.	Replace.
	Incorrect aeration.	Check that air shutter plate on mixing chamber is correctly positioned.
End vent vacuum too low (ie below 6.25 mbar (2.5in wg). Check section 3, commissioning for exact vacuum details.	Branch damper closed or broken.	Open branch damper until end vent vacuum is 6.25 mbar (2.5in wg). Replace damper if necessary.
	Fan rotation incorrect.	Reverse two phase wires on 3 phase motors.
	Fan speed wrong.	Check voltage at motor. Replace if necessary.
	Fan impeller loose or defective.	Tighten or replace if necessary.
	Restriction to fan inlet.	Clear restriction, repair flue duct.
	Air leaks into system via poor joints.	Replace defective tube couplers gaskets or acoustic joints.
	Insufficient fall of system towards fan allowing condensate blockage.	Reinstate system fall.
	Non return valve sticking open on condensate trap assembly.	Clean valve or replace if damaged.

7. Replacing Parts.

7.1 Removal of burner assembly.

a Disconnect electrical supply at burner mains inlet connection.

b Turn-off gas supply at service cock and disconnect union.

b1 *On EVM burners, remove the vacuum tubes by releasing the two compression fittings (14).*

c Release the slider latches (30) from the underside of the burner base plate (1).

d Pull lid (2) apart and upwards from base (1). Lid is attached to back plate via 2 screws (34).

e Remove lid by unscrewing set pins (34) from back of base plate.

f Remove spark electrode assembly (11) (see section 7.7)

g Release and remove the four set screws (40) from the combustion chamber flange.
Retain combustion chamber gasket (28).

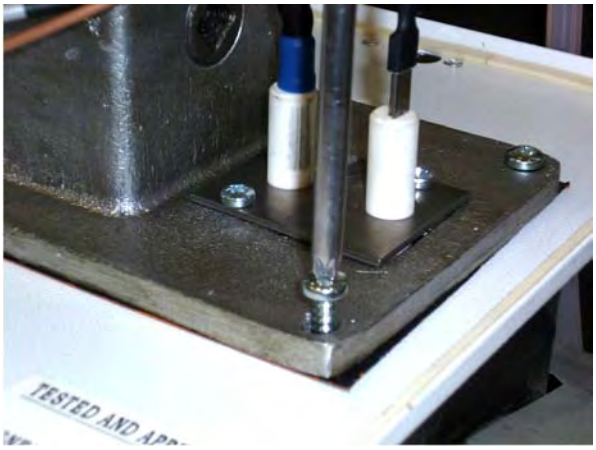

h Lift burner clear of combustion chamber and withdraw.

i Remove the burner heat shield.

j When replacing do so in the reverse order ensuring that the gasket between the burner heat shield and combustion chamber (28) is undamaged or replaced.

k Check for gas soundness.

7.2 Removal of gas valve.

a *Remove burner assembly from combustion chamber as detailed in 7.1.*

b Secure burner head (6) and unscrew gas inlet pipe (21).

c Remove burner set screws (37) and valve bracket set screws (36) from burner base plate.

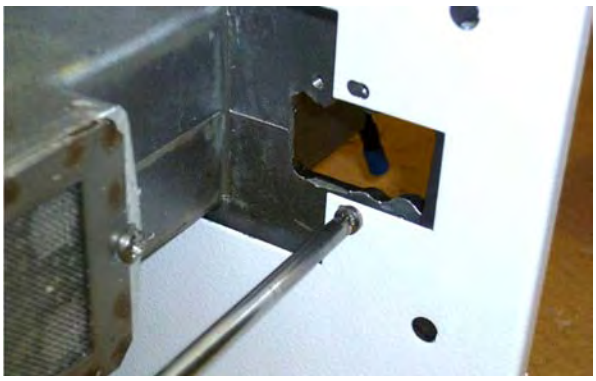

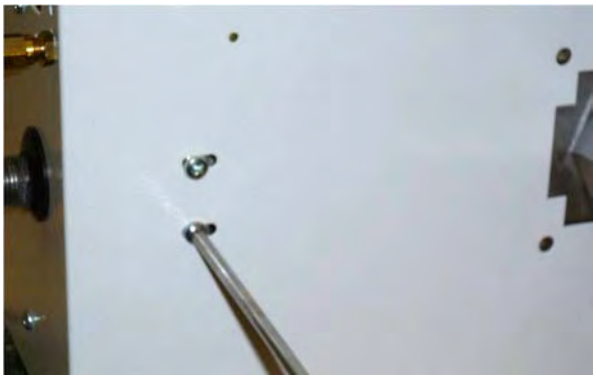

d Withdraw burner head and valve from base plate. Retain burner gasket for later (28).

e Secure burner head (6) and unscrew gas valve (4).

f Replace in reverse order.

7.3 Filter Replacement.

a Release the slider latches (30) from the underside of the burner base plate (1).

b Pull lid (2) apart and upwards from base(1).

c Unscrew wing nut fastener (33).

d Slide filter (5) out of location brackets.

e Replace in reverse order.

7.4 Controller Replacement

a Disconnect electrical supply.

b Release the slider latches (30) from the underside of the burner base plate.

c Pull lid (2) apart and upwards from base (1).

d Disconnect JST connection (3a).

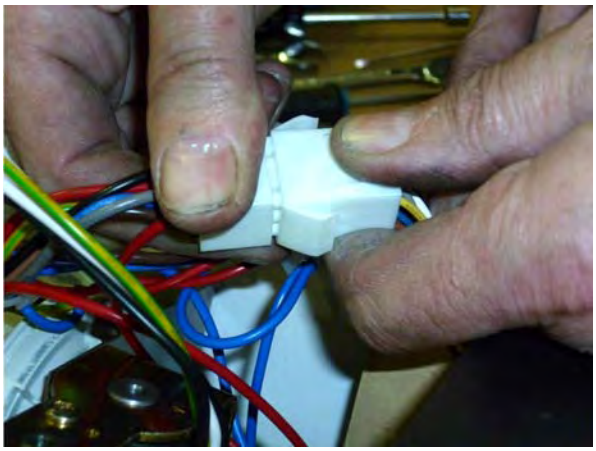

e Disconnect ignition wire from controller (3b).

f Release three push clips (32) from controller fixing holes.

g Remove controller (3)

h Replace in reverse order.

7.5 Pressure Switch Replacement (EVM ONLY).

a Disconnect electrical supply.

b Release the slider latches (30) from the underside of the burner base plate.

c Pull lid (2) apart and upwards from base (1).

d Disconnect both silicone tubes (42 & 43) from pressure switch (noting connection orientation).

e Disconnect three electrical cables from pressure switch (noting connection orientation).

f Remove fixing screws and nuts from the pressure switch bracket and withdraw.

g Remove retaining screws from bracket to pressure switch and remove unit

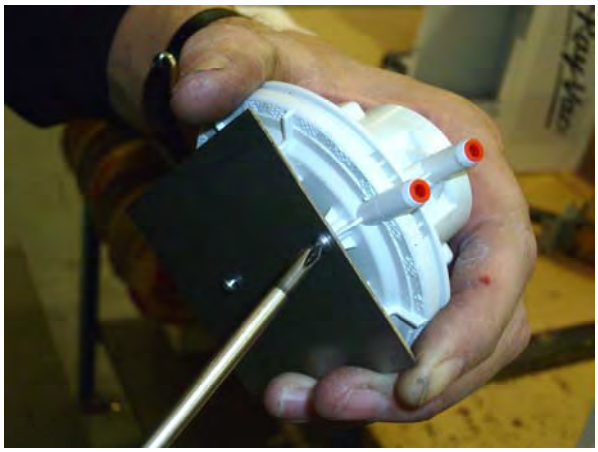

h Replace in reverse order.

7.6 Sequence Timer Replacement.

a Disconnect electrical supply.

b Release the slider latches (30) from the underside of the burner base plate.

c Pull lid (2) apart and upwards from base (1).

d Remove controller as described in section 7.4

e Disconnect electrical connection from the timer.

f Remove fixing screws from timer bracket and withdraw.

g Remove timer from the insulation wrap and remove unit.

h Replace in reverse order.

7.7 Electrode Assembly Replacement.

a Disconnect electrical supply.

b Release the slider latches (30) from the underside of the burner base plate.

c Pull lid (2) apart and upwards from base (1).

d Remove fixing screws (37) from electrode mounting flange (11).

e Carefully withdraw electrode assembly from burner - noting electrode orientation.

f Replace in reverse order.

7.8 Injector Replacement. (See figure 6a)

a Turn off gas and disconnect electrical supply.

b Release the slider latches (30) from the underside of the burner base plate (1).

c Pull lid (2) apart and upwards from base (1).

d remove fixings screws (37) and air shutter plate (9) from top of burner casting.

e Remove plug (23).

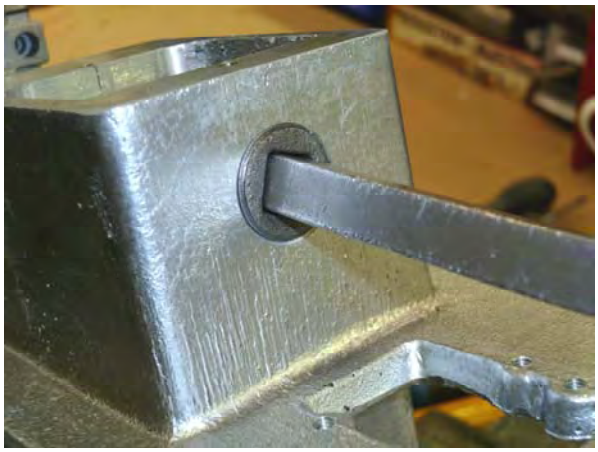

f Unscrew brass jet (10) inside mixing chamber using 8mm allen key and withdraw through 1/2in BSP hole.

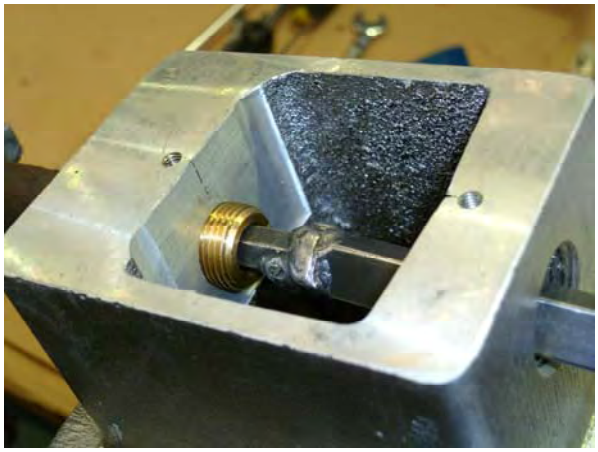

g Replace in reverse order.

7.9 Combustion Chamber Viewing Window Replacement.

a Turn off the system including the vacuum fan.

b Unscrew dome nuts (47) and spring washers (48). Remove sight glass cover (49), gasket (50) and mica window (51).

c Replace in reverse order as shown ensuring components are re-assembled in correct order.

8. User & Operating Instructions.

8.1 To Start the Heater

1. Ensure that gas supply is turned on at each burner.

2. Switch on electrical supply to heaters.

3. Ensure that the controls are correctly set i.e.;

   - Clock is correctly set.
   - Heater program is correctly set.
   - Required room temp is correctly set

4. The vacuum fan will operate and at the same time the **red** neon lights will illuminate at all burners. After 10 seconds the burners closest to the exhaust fan in each radiant branch will light, with both **red** and **amber** neons illuminated. After a further 25 seconds the next burner in line within each radiant branch will light and after a further 25 seconds the end vent burner will light.

5 If the lighting up sequence fails and lockout occurs press the lockout reset button (if available), or switch off the electrical supply and restart after 40 seconds. If lockout occurs three times consecutively switch off and isolate the gas and electricity supplies.

Contact the AmbiRad Service department.

8.2. To Switch Off Heater

1. Switch off electrical supply to the heater. The burner will stop and the fan will shut off.

2. If the heater is to be switched off for periods in excess of one week it is highly recommended that both the gas and the electrical supplies are turned off.

8.3. Routine Maintenance between Service Intervals

After ensuring that the heater is cold and mains electric isolated, cleaning of the reflectors with a soft cloth and a mild detergent (non solvent based cleaners only) in water can be undertaken.

Additional removal of dust from the radiant tubes, burner and heat exchanger can be undertaken.

8.4 Frequency of Servicing

The manufacturer recommends that to ensure continued efficient and safe operation of the appliance, the heater is serviced annually by a competent person e.g. every year in normal working conditions but in exceptional dusty or polluted conditions more frequent servicing may be required.

The manufacturer offers a maintenance service.

Details are available on request.

For Service requirements, please contact AmbiRad.

For further technical and service support visit our Support Information Database at www.s-i-d.co.uk

Note This notice must be fixed alongside the electrical service switch. On some systems only the end vent burner contains a delay timer. In this instance the inline burners will light simultaneously and the end vent burners will light after an 80 seconds delay.

Document reference number **GB/NRV/193/0711**

AmbiRad Limited Fens Pool Avenue
Brierley Hill West Midlands DY5 1QA
United Kingdom.

Telephone 01384 489700
Facsimile 01384 489707
Email info@ambirad.co.uk
Website www.ambirad.co.uk
Technical Support www.s-i-d.co.uk

An AmbiRad Group brand

AMBIRAD
ENERGY EFFICIENT HEATING SYSTEMS