Vokèra

Hydra

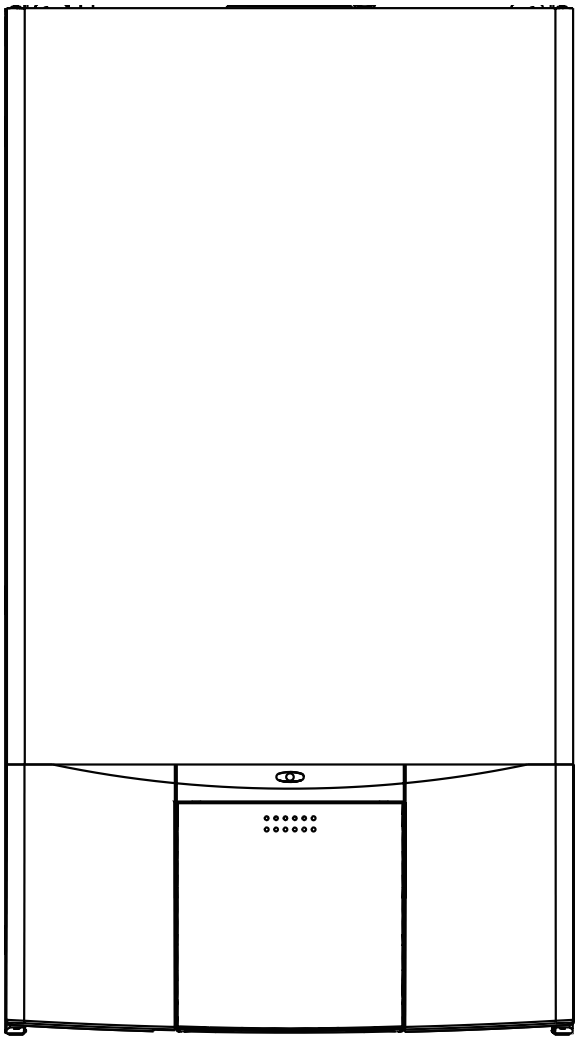

Installation & Servicing Instructions

CE

THESE INSTRUCTIONS TO BE RETAINED BY USER

benchmark™

The code of practice for the installation, commissioning & servicing of central heating systems

Contents

Design principles & operating sequence		Page
1.1	Principle components	2
1.2	Mode of operation (at rest)	2
1.3	Domestic hot water mode	2
1.4	Central heating mode	2
1.5	Safety devices	2

Technical data		Page
2.1	Central heating	3
2.2	Domestic hot water	3
2.3	Gas pressure	3
2.4	Expansion vessel	3
2.5	Dimensions	3
2.6	Clearances	3
2.7	Connections	3
2.8	Electrical	3
2.9	Flue details	3
2.10	Efficiency	3
2.11	Emissions	3
2.12	Adjusting operating parameters	4
2.13	Pump duty	4

General requirements (UK)		Page
3.1	Related documents	5
3.2	Location of appliance	5
3.3	Gas supply	5
3.4	Flue system	5
3.5	Air supply	6
3.6	Water circulation	6
3.7	Electrical supply	6
3.8	Showers	6
3.9	Mounting on a combustible surface	6
3.10	Timber framed buildings	6
3.11	Condensate disposal	7
3.12	Inhibitors	7

General requirements (EIRE)		Page
3A.1	Related documents	8
3A.2	Location of appliance	8
3A.3	Gas supply	8
3A.4	Flue system	8
3A.5	Air supply	8
3A.6	Water circulation	8
3A.7	Electrical supply	9
3A.8	Showers	9
3A.9	Mounting on a combustible surface	9
3A.10	Timber framed buildings	9
3A.11	Condensate disposal	9
3A.12	Inhibitors	9
3A.13	Declaration of conformity	9

Installation		Page
4.1	Delivery	10
4.2	Contents	10
4.3	Unpacking	10
4.4	Preparation for mounting the appliance	10
4.5	Fitting the flue	10
4.6	Connecting the gas & water	13
4.7	Condensate outlet	14
4.8	Automatic air release valve	14
4.9	Electrical connections	14
4.10	Casing removal	15

Commissioning		Page
5.1	Gas supply installation	16
5.2	The heating system	16
5.3	Initial filling of the system	16
5.4	Initial flushing of the system	16
5.5	Filling the hot water system	16
5.6	Pre-operation checks	16
5.7	Initial lighting	16
5.8	Final flushing of the heating system	16
5.9	Appliance operating parameters	16
5.10	Parameters 1-4	17
5.11	Information mode	17
5.12	Setting the system design pressure	17
5.13	Regulating the central heating system	17
5.14	Checking dynamic gas pressure	17
5.15	Final checks	18
5.16	Instructing the user	18

Servicing		Page
6.1	General	19
6.2	Routine annual servicing	19
6.3	Replacement of components	19
6.4	Component removal procedure	19
6.5	Pump head	19
6.6	Safety valve	19
6.7	Automatic air valve	19
6.8	Pressure gauge	19
6.9	NTC thermistors (temperature sensors)	20
6.10	Main PCB	20
6.11	Gas valve	20
6.12	Fan	20
6.13	Burner	20
6.14	Electrode	21
6.15	Injector	21
6.16	DHW heat exchanger	21
6.17	Motorised valve actuator	21
6.18	Divertor valve assembly	21
6.19	Condense trap	21
6.20	Condense pressure switch	21
6.21	Combustion cover	22
6.22	Expansion vessel	22
6.23	Input & status PCB	23

Checks, adjustments and fault finding		Page
7.1	Checking appliance operation	24
7.2	Appliance mode of operation	24
7.3	Service paameters (5-42)	24
7.4	Adjusting the gas valve	25
7.5	1st digit status code	26
7.6	Faults codes temporary	26
7.7	Final fault codes	26
7.8	Diagnostic recall	27
7.9	Checking the expansion vessel	27
7.10	External faults (installation)	27
7.11	Electrical checks	27
7.12	Fault finding	28

Wiring diagrams		Page
8.1	Important note	33
8.2	External controls	33

Exploded diagrams		Page
9.1	Table 1	37
9.2	Table 2	38
9.3	Table 3	39
9.4	Table 4	40
9.5	Table 5	41

L.P.G. instructions		Page
10.1	Technical data	42
10.2	Related documents	42
10.3	Gas supply	42
10.4	Gas supply installation	42
10.5	Adjusting the gas valve	42

INTRODUCTION

The Hydra is a combined central heating and domestic hot water condensing boiler, which – by design – incorporates full sequence electronic ignition, circulating pump, expansion vessel, safety valve, pressure gauge and automatic bypass.
The Hydra is produced as a room sealed, category C1, C3, C4, C5, C6 appliance, suitable for wall mounting applications only. The Hydra is provided with a fan powered flue outlet with an annular co-axial combustion air intake that can be rotated – horizontally – through 360 degrees for various horizontal or vertical applications. The Hydra can also be used with the Vokera twin flue system.
This appliance is designed primarily for use with sealed systems; however it can also be used on an open vented system, provided that the necessary installation requirements are met.

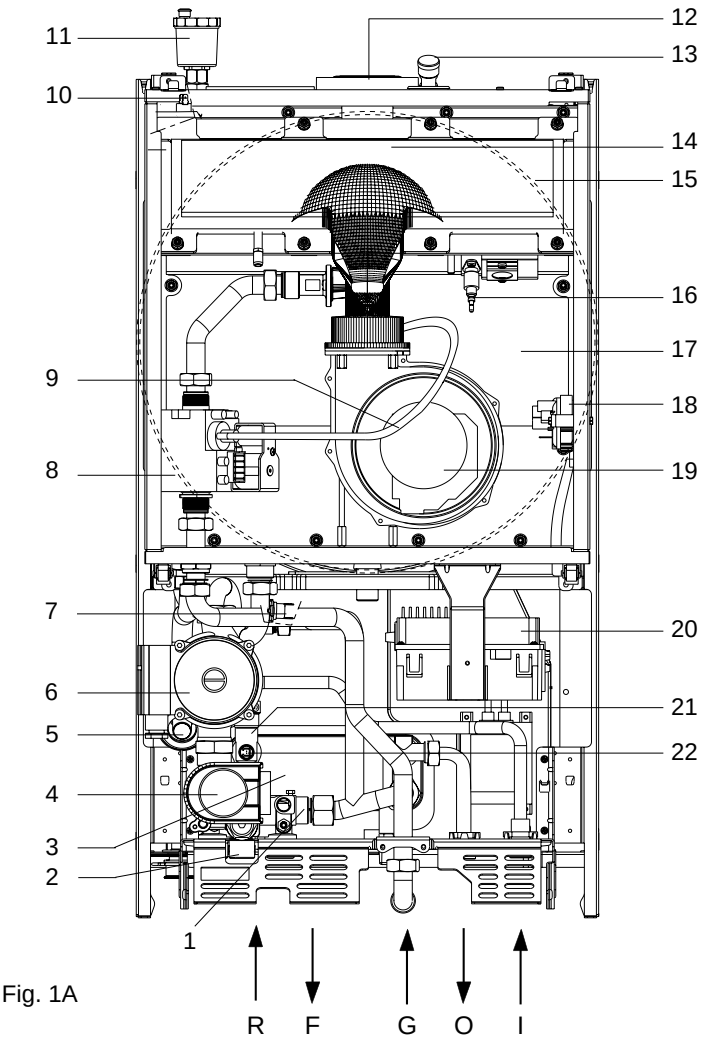

Fig. 1A

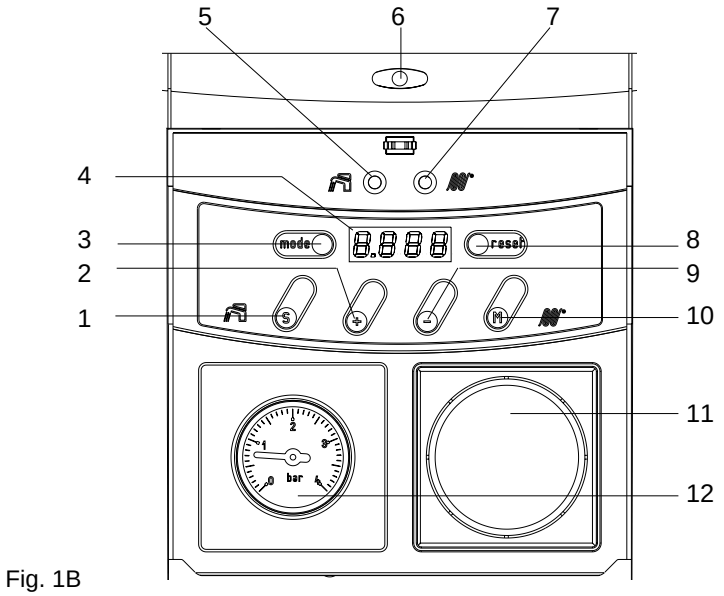

Fig. 1B

General layout (fig. 1A)

1 Auto by-pass
2 Safety valve
3 Domestic water heat exchanger
4 Three port valve actuator
5 Condense trap
6 Pump
7 Return sensor (NTC2)
8 Gas valve
9 Silicone pressure tube
10 Flow sensor (NTC1)
11 Auto air vent (AAV)
12 Flue outlet & air intake
13 Flue gas analysis test point
14 Burner plate
15 Expansion vessel
16 Spark/Sensing Electrode
17 Main heat exchanger
18 Pressure switch
19 Fan assembly
20 Electronic Control Board (PCB)
21 Flow governor
22 Domestic water sensor (NTC3)
R Heating return connection
F Heating flow connection
G Gas connection
O Hot water outlet
I Cold water inlet

Control board (fig. 1B)

1 DHW button/STEP button
2 PLUS button
3 MODE button
4 4 digits display
5 DHW LED
6 Status LED
7 CH LED
8 RESET button
9 MINUS button
10 CH button/MEMO button
11 Time clock aperture
12 Pressure gauge

1.1 PRINCIPLE COMPONENTS

- A fully integrated electronic control board featuring differential temperature control, continuous air/gas modulation, anti-cycle control, pump over-run, self-diagnostic fault indicator, electronic ignition with flame supervision & appliance frost protection
- Cast aluminium mono-block heat exchanger
- Low Nox burner with pre-mix
- Two-stage gas valve
- Pump
- Expansion vessel
- Pressure gauge
- Safety valve

1.2 MODE OF OPERATION (at rest)

When there is no demand for heating or hot water, the boiler will periodically light to pre-heat the domestic hot water heat exchanger to approximately 55 °C. This ensures that the appliance is at operating temperature when there is a request for domestic hot water. The parameter for the allowable temperature drop - between pre-heat operation - can be adjusted. If the appliance remains inactive for a period of 24 hours, the pump and motorised valve will be energised for a few moments to prevent these components from seizing. Should the flow temperature sensor fall below 7 °C the pump will be energised. If the flow sensor temperature falls to below 3 °C the burner will be lit and the appliance will operate at the minimum output until the temperature of the flow sensor reaches 10 °C, whereupon the pump will continue to run in pump over-run mode.

1.3 DOMESTIC HOT WATER MODE

When the appliance is at rest, the motorised valve is energised to the hot water position, when a demand for hot water is made the cold water temperature sensor activates the pump and fan. When the fan is sensed to be operating correctly, the ignition sequence commences. The speed of the fan and therefore the output of the boiler is determined by the temperature of the water sensed by the return temperature sensor, consequently a high temperature at the return sensor results in a lower fan speed.

As the water temperature increases, the temperature sensors - located on the flow and return pipes of the boiler - reduce the fan speed via the electronic circuitry. Depending on the load, either the water temperature will continue to rise until the set point is achieved or the water temperature will fall whereby fan speed will increase relative to the output required.

1.4 CENTRAL HEATING MODE

When there is a request for heat via the time clock and/or external controls the motorised valve and pump will go through a self-test function this is to ensure correct operation and valve configuration. Once the self-test function is complete, the pump and fan will be activated via the flow temperature sensor. When the fan is sensed to be operating correctly, the ignition sequence commences. The speed of the fan and therefore the output of the boiler is determined by the temperature of the water sensed by the flow & return temperature sensors, consequently a high temperature at the flow sensor results in a lower fan speed. As the water temperature increases, the temperature sensors - located on the flow and return pipes of the boiler - reduce the fan speed via the electronic circuitry. Depending on the load, either the water temperature will continue to rise until the set point is achieved or the water temperature will fall whereby fan speed will increase relative to the output required. When the boiler has reached the set point, the burner will switch off. The built-in anti-cycle device prevents the burner from re-lighting for an adjustable period of time (factory default is 92 minutes). When the temperature of the flow sensor falls below the set-point, the burner will re-light.

1.5 SAFETY DEVICES

When the appliance is in use, safe operation is ensured by:

- a high limit thermostat that interrupts the operation of the burner;
- a differential temperature protection circuit which interrupts the burner if the temperature differential is inverted;
- a fan speed sensor that checks the correct operation of the fan, thereby allowing safe operation of the burner;
- a condense pressure switch that will stop the burner from operating should the condense trap become blocked;
- a safety valve which releases excess pressure from the primary circuit.

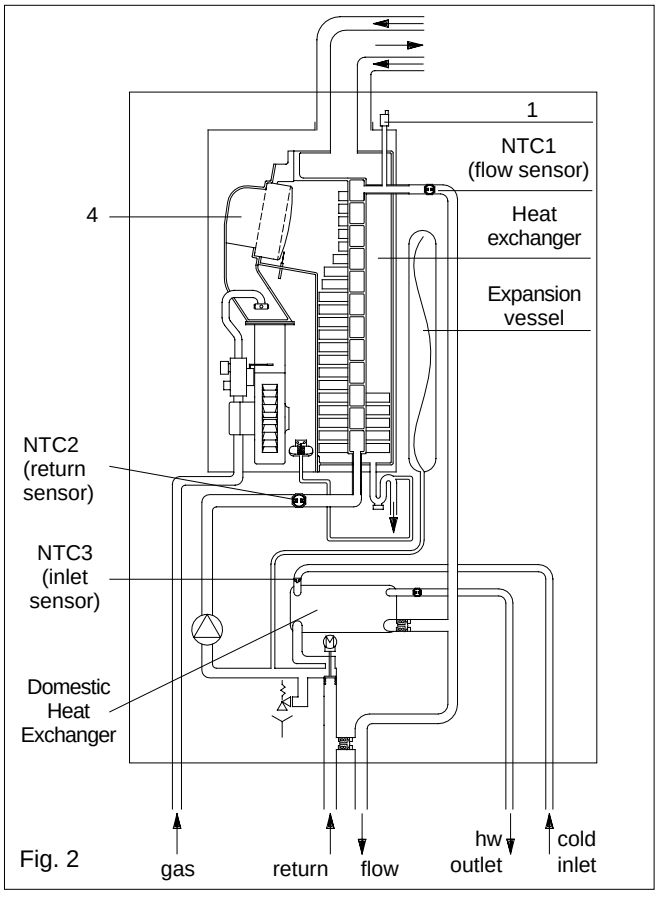

Fig. 2

SECTION 2 TECHNICAL DATA

2.1 Central heating		
Heat input (gross)	29.00 kW	
Maximum heat output 60/80°C (return & flow temperature)	25.3 kW	
Maximum heat output 30/50°C (return & flow temperature)	26.8 kW	
Minimum heat output 60/80°C (return & flow temperature)	7.3 kW	
Minimum heat output 30/50°C (return & flow temperature)	8.1 kW	
Minimum working pressure	0.5 bar	
Maximum working pressure	3 bar	
Minimum flow rate	350 litres per hour	
2.2 Domestic hot water		
Maximum input (gross)	29.00 kW	
Maximum output	25.3 kW	
Minimum input	8.1 kW	
Flow rate (35 °C rise)	10.4 litres/min	
Maximum inlet pressure	6.00 bar	
Minimum inlet pressure to operate	0.1 bar	
Minimum flow rate to operate	0.1 litres/min	
2.3 Gas pressure		
Inlet pressure (G20)	20.0 mbar	
Maximum gas rate	2.76 m^3/h	
Minimum gas rate	0.80 m^3/h	
Injector size	single injector with six 3.8 mm holes	
2.4 Expansion vessel		
Capacity	10 litres	
Maximum system volume	91 litres (approx.)	
Pre-charge pressure	1.0 bar	
2.5 Dimensions		
Height	820 mm	
Width	450 mm	
Depth	355 mm	
Dry weight	57 kg	
2.6 Clearances		
Sides	12 mm	
Top	150 mm from casing or 25 mm above flue elbow (whichever is applicable)	
Bottom	150 mm	
Front	600 mm	
2.7 Connections		
Flow & return	22 mm compression	
Hot & cold water	15 mm compression	
Gas	15 mm compression	
Safety valve	15 mm compression	
2.8 Electrical		
Voltage	230V/~ 50hz	
Power consumption	130 W	
Internal fuse	F2A	
External fuse	3A	
2.9 Flue details		
Maximum horizontal flue length (concentric)	6.45 metres	
Maximum vertical flue length (concentric)	7.45 metres	
Maximum twin flue length (horizontal or vertical)	29 m/29 m + terminal	
2.10 Efficiency		
SEDBUK rating	90.3% (Band “A”)	
2.11 Emissions	**MIN. OUTPUT**	**MAX. OUTPUT**
NO_x	15 ppm	30 ppm
CO	50 ppm	50 ppm
CO_2	9.8%	9.8%
CO/CO_2 ratio	0.0005 to 1	0.0005 to 1

Ref. Condition 15 °C, 1013,25 mbar, dry gas
NOTE: L.P.G. data refer to section 10

2.12 Adjustable operating parameters				
PARAMETER		**MINIMUM**	**MAXIMUM**	**FACTORY SETTING**
P. 1	Hot water outlet temperature	40 °C	65 °C	55 °C
P. 26	Pre-heat temperature drop	-5 °C	30 °C	15 °C
P. 4	Central heating flow temperature	20 °C	90 °C	75 °C
P. 20	Pump over-run	10 seconds	99 m	10 m
P. 28	Anti-cycle delay	0 seconds	306 seconds	91.8 seconds

2.12 PUMP DUTY

Fig. 3 shows the flow rate available – after allowing for pressure loss through the appliance – for system requirements. When using this graph apply only the pressure loss of the system. The graph is based on 20 ºC temperature differential.

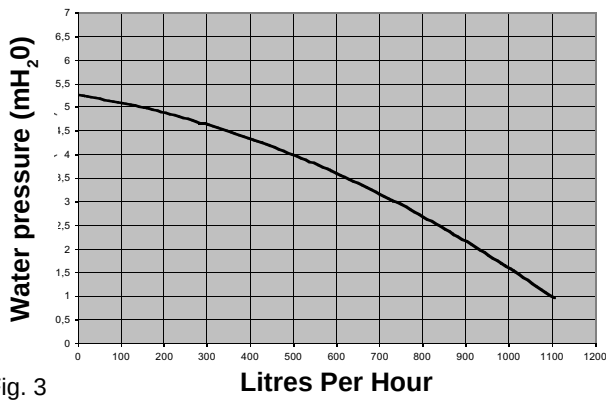

Fig. 3

SECTION 3 GENERAL REQUIREMENTS (UK)

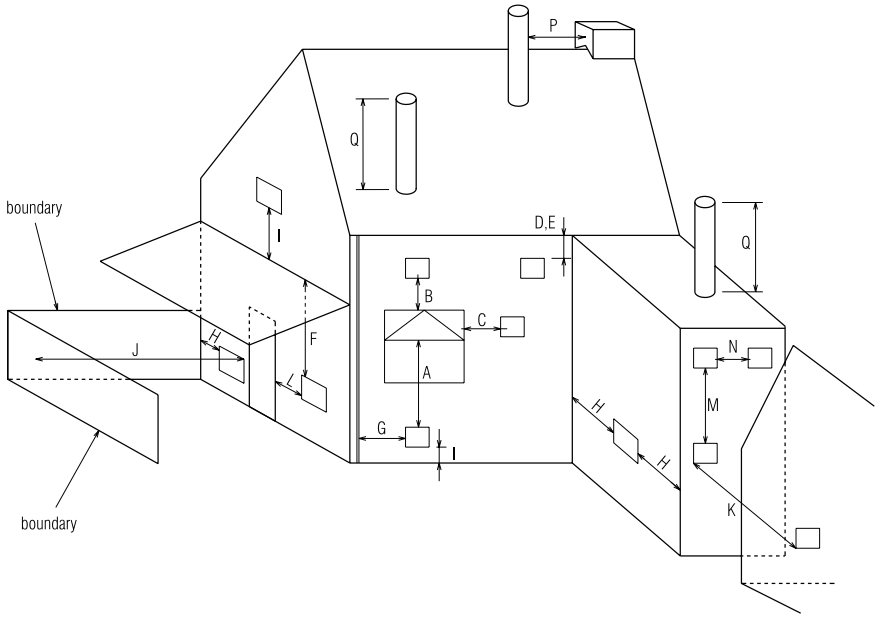

Key	Location	Minimum distance
A	Below an opening (window, air-brik, etc.)	300 mm
B	Above an opening (window, air-brik, etc.)	300 mm
C	To the side of an opening (window, air-brik, etc.)	300 mm
D	Below gutter, drain-pipe, etc.	75 mm
E	Below eaves	200 mm
F	Below balcony, car-port roof, etc.	200 mm
G	To the side of a soil/drain-pipe, etc.	150 mm
H	From internal/external corner or boundary	300 mm
I	Above ground, roof, or balcony level	300 mm
J	From a surface or boundary facing the terminal	600 mm
K	From a terminal facing a terminal	1200 mm
L	From an opening in the car-port into the building	1200 mm
M	Vertically from a terminal on the same wall	1500 mm
N	Horizontally from a terminal on the same wall	300 mm
P	From a structure to the side of the vertical terminal	300 mm
Q	From the top of the vertical terminal to the roof flashing	As determined by the fixed collar of the vertical terminal

Fig. 4

This appliance must be installed by a competent person in accordance with the Gas Safety (Installation & Use) Regulations.

3.1 RELATED DOCUMENTS

The installation of this boiler must be in accordance with the relevant requirements of the Gas Safety (Installation & Use) Regulations, the local building regulations, the current I.E.E. wiring regulations, the bylaws of the local water undertaking, the Building Standards (Scotland) Regulation and Building Standards (Northern Ireland) Regulations.

It should be in accordance also with any relevant requirements of the local authority and the relevant recommendations of the following British Standard Codes of Practice.

3.2 LOCATION OF APPLIANCE

The appliance may be installed in any room or internal space, although particular attention is drawn to the requirements of the current I.E.E. wiring regulations, and in Scotland, the electrical provisions of the Building Regulations, with respect to the installation of the appliance in a room or internal space containing a bath or shower.

Details of essential features of compartment/ cupboard design, including airing cupboard installations, are given in BS 6798. This appliance is not suitable for external installation.

3.3 GAS SUPPLY

The gas meter – as supplied by the gas supplier – must be checked to ensure that it is of adequate size to deal with the maximum rated input of all the appliances that it serves. Installation pipes must be fitted in accordance with BS 6891.

Pipe work from the meter to the appliance must be of adequate size. Pipes of a smaller size than the appliance gas inlet connection must not be used.

The installation must be tested for soundness in accordance with BS 6891.

If the gas supply serves more than one appliance, it must be ensured that an adequate supply is maintained to each appliance when they are in use at the same time.

BS 5440	**PART 1**	**FLUES**
BS 5440	**PART 2**	**FLUES & VENTILATION**
BS 5449	**PART 1**	**FORCED CIRCULATION HOT WATER SYSTEMS**
BS 5546		**INSTALLATION OF GAS HOT WATER SUPPLIES FOR DOMESTIC PURPOSES (2nd FAMILY GASES)**
BS 6798		**INSTALLATION OF BOILERS OF RATED INPUT NOT EXCEEDING 60kW**
BS 6891		**LOW PRESSURE INSTALLATION PIPES**
BS 7074	**PART 1**	**APPLICATION, SELECTION AND INSTALLATION OF EXPANSION VESSELS AND ANCILLARY EQUIPMENT FOR SEALED WATER SYSTEMS**

When an appliance is installed in a room or internal space containing a bath or shower, the appliance or any control pertaining to it must not be within reach of a person using the bath or shower.

The location chosen for the appliance must permit the provision of a safe and satisfactory flue and termination. The location must also permit an adequate air supply for combustion purposes and an adequate space for servicing and air circulation around the appliance.

Where the installation of the appliance will be in an unusual location special procedures may be necessary, BS 6798 gives detailed guidance on this aspect.

A compartment used to enclose the appliance must be designed and constructed specifically for this purpose. An existing compartment/cupboard may be utilised provided that it is modified to suit.

3.4 FLUE SYSTEM

The terminal should be located where the dispersal of combustion products is not impeded and with due regard for the damage and discoloration that may occur to building products located nearby. The terminal must not be located in a place where it is likely to cause a nuisance (fig. 4).

In a cold and/or humid water, water vapour may condense on leaving the terminal; the effect of such pluming must be considered.

If installed less than 2 metres above a pavement or platform to which people have access (including balconies or flat roofs) the terminal must be protected by a guard of durable material. The guard must be fitted centrally over the terminal. Refer to BS 5440 Part 1, when the terminal is 0.5 metres (or less) below plastic guttering or 1 metre (or less) below painted eaves.

3.5 AIR SUPPLY

The following notes are intended for general guidance only.

This appliance is a room sealed, fan-flued boiler, consequently it does not require a permanent air vent for combustion air supply.

When installed in a cupboard or compartment, ventilation for cooling purposes is also not required.

3.6 WATER CIRCULATION

Detailed recommendations are given in BS 5449 Part 1 and BS 6798. The following notes are for general guidance only.

3.6.1 PIPEWORK

It is recommended that copper tubing to BS 2871 Part 1 is used in conjunction with soldered capillary joints.

Where possible pipes should have a gradient to ensure air is carried naturally to air release points and that water flows naturally to drain cocks.

Except where providing useful heat, pipes should be insulated to avoid heat loss and in particular to avoid the possibility of freezing. Particular attention should be paid to pipes passing through ventilated areas such as under floors, loft-space and void areas.

3.6.2 AUTOMATIC BY-PASS

The appliance has a built-in automatic by-pass, consequently there is no requirement for an external by-pass, however the design of the system should be such that it prevents boiler 'cycling'.

3.6.3 DRAIN COCKS

These must be located in accessible positions to facilitate draining of the appliance and all water pipes connected to the appliance. The drain cocks must be manufactured in accordance with BS 2879.

3.6.4 AIR RELEASE POINTS

These must be positioned at the highest points in the system where air is likely to be trapped. They should be used to expel trapped air and allow complete filling of the system.

3.6.5 EXPANSION VESSEL

The appliance has an integral expansion vessel to accommodate the increased volume of water when the system is heated. It can accept up to 10 litres of expansion from within the system, generally this is sufficient, however if the system has an unusually high water content, it may be necessary to provide additional expansion capacity.

3.6.6 FILLING POINT

A method for initial filling of the system and replacing water lost during servicing etc. must be provided. This method of filling must comply with the current Water Supply (Water Fittings) Regulations 1999 and Water Bylaws 2000 (Scotland).

3.6.7 LOW PRESSURE SEALED SYSTEM

An alternative method of filling the system would be from an independent make-up vessel or tank mounted in a position at least 1 metre above the highest point in the system and at least 5 metres above the boiler (fig. 5). The cold feed from the make-up vessel or tank must be fitted with an approved non-return valve and stopcock for isolation purposes. The feed pipe should be connected to the return pipe as close to the boiler as possible.

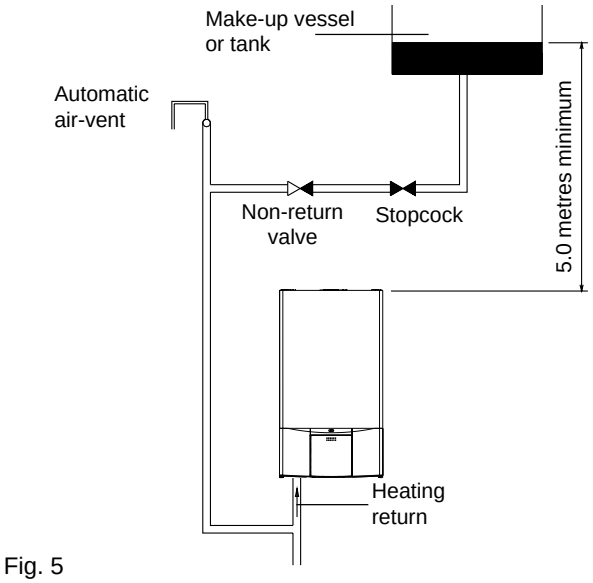

Fig. 5

3.6.8 FREQUENT FILLING

Frequent filling or venting of the system may be indicative of a leak. Care should be taken during the installation of the appliance to ensure all aspects of the system are capable of withstanding pressures up to at least 3 bar.

3.7 ELECTRICAL SUPPLY

The appliance is supplied for operation on 230V @ 50Hz electrical supply; it must be protected with a 3-amp fuse. The method of connection to the mains electricity supply must allow for complete isolation from the supply. The preferred method is by using a double-pole switch with a contact separation of at least 3 mm. The switch must only supply the appliance and its corresponding controls, i.e. time clock, room thermostat, etc. Alternatively an un-switched shuttered socket with a fused 3-pin plug both complying with BS 1363 is acceptable.

3.8 SHOWERS

If the appliance is intended for use with a shower, the shower must be thermostatically controlled and be suitable for use with a combination boiler.

3.9 MOUNTING ON A COMBUSTIBLE SURFACE

If the appliance is to be fitted on a wall of combustible material, a sheet of fireproof material must protect the wall.

3.10 TIMBER FRAMED BUILDINGS

If the appliance is to be fitted in a timber framed building, it should be fitted in accordance with the Institute of Gas Engineers publication (IGE/UP/7) "Guide for Gas Installations in a Timber Frame Buildings".

3.11 CONDENSATE DISPOSAL

When choosing a location for the boiler, consideration should be given to the disposal of the condensate discharge into a suitable drain or soil pipe. The condensate outlet pipe must be connected to the drain in accordance with building regulations or other rules in force.

3.12 INHIBITORS

Vokera recommend that a neutral inhibitor is used to protect the heating system from the effects of corrosion and/or electrolytic action. The inhibitor must be administered in strict accordance with the manufacturers* instructions.

*Fernox and Sentinel manufacture products that have proved suitable for use with Vokera appliances. Vokera Ltd. cannot comment on the suitability of any other such product with our appliances.

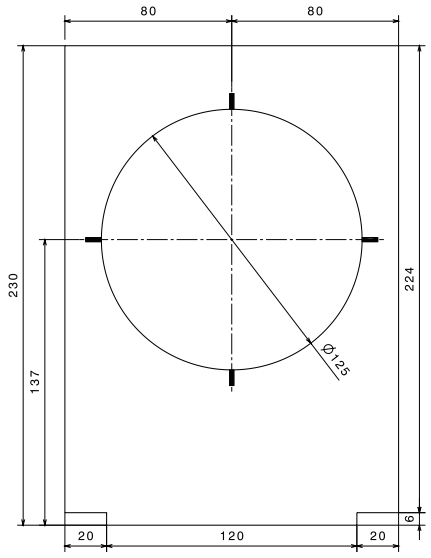

Fig. 6

Fig. 6B

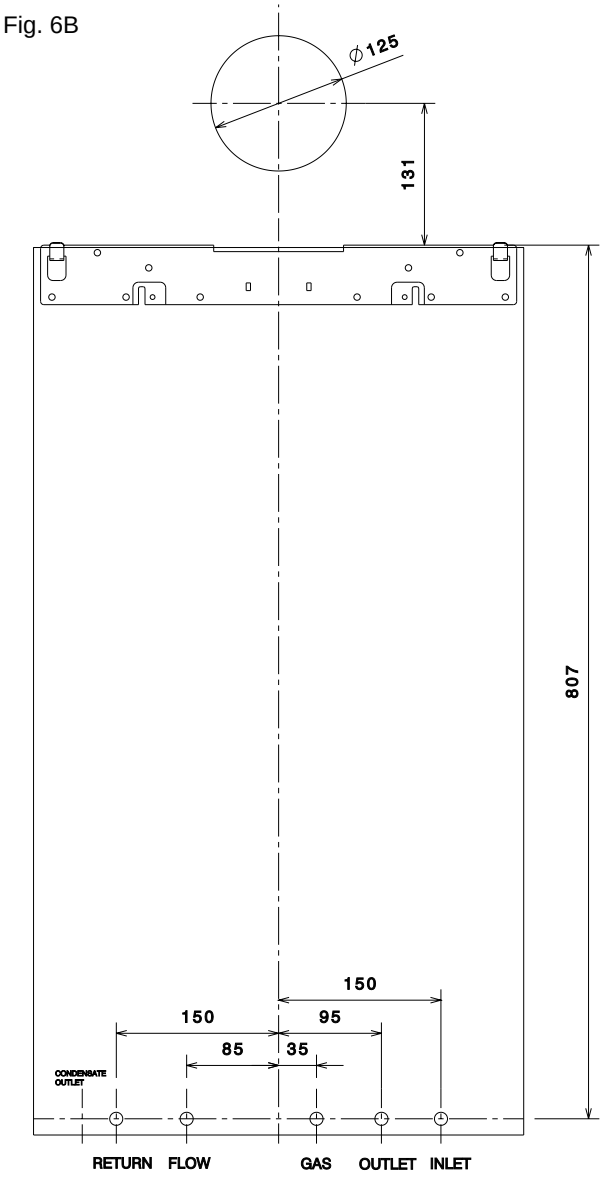

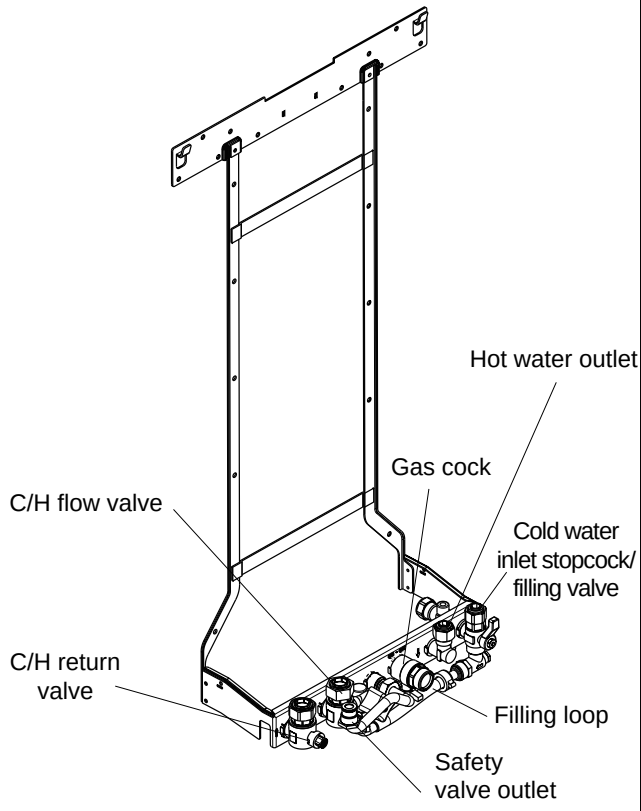

Fig. 6A

This appliance must be installed by a competent person in accordance with and defined by, the Standard Specification (Domestic Gas Installations) Declaration (I.S. 813).

3A.1 RELATED DOCUMENTS

The installation of this boiler must be in accordance with the relevant requirements of the local building regulations, the current ETCI National Rules for Electrical Installations, and the bylaws of the local water undertaking.

It should be in accordance also with any relevant requirements of the local and/or district authority.

3A.2 LOCATION OF APPLIANCE

The appliance may be installed in any room or internal space, although particular attention is drawn to the requirements of the current ETCI National Rules for Electrical Installations, and I.S. 813, Annex K.

When an appliance is installed in a room or internal space containing a bath or shower, the appliance or any control pertaining to it must not be within reach of a person using the bath or shower.

The location chosen for the appliance must permit the provision of a safe and satisfactory flue and termination. The location must also permit an adequate air supply for combustion purposes and an adequate space for servicing and air circulation around the appliance. Where the installation of the appliance will be in an unusual location special procedures may be necessary, refer to I.S. 813 for detailed guidance on this aspect.

A compartment used to enclose the appliance must be designed and constructed specifically for this purpose. An existing compartment/ cupboard may be utilised provided that it is modified to suit.

This appliance is not suitable for external installation.

3A.3 GAS SUPPLY

The gas meter – as supplied by the gas supplier – must be checked to ensure that it is of adequate size to deal with the maximum rated input of all the appliances that it serves. Installation pipes must be fitted in accordance with I.S. 813.

Pipe work from the meter to the appliance must be of adequate size. Pipes of a smaller size than the appliance gas inlet connection must not be used. The installation must be tested for soundness in accordance with I.S. 813.

If the gas supply serves more than one appliance, it must be ensured that an adequate supply is maintained to each appliance when they are in use at the same time.

3A.4 FLUE SYSTEM

The terminal should be located where the dispersal of combustion products is not impeded and with due regard for the damage and discoloration that may occur to building products located nearby. The terminal must not be located in a place where it is likely to cause a nuisance (see I.S. 813).

In cold and/or humid weather, water vapour may condense on leaving the terminal; the effect of such pluming must be considered.

If installed less than 2m above a pavement or platform to which people have access (including balconies or flat roofs) the terminal must be protected by a guard of durable material. The guard must be fitted centrally over the terminal. Refer to I.S. 813, when the terminal is 0.5 metres (or less) below plastic guttering or 1 metre (or less) below painted eaves.

3A.5 AIR SUPPLY

The following notes are intended for general guidance only.

This appliance is a room-sealed, fan-flued boiler, consequently it does not require a permanent air vent for combustion air supply.

When installed in a cupboard or compartment, ventilation for cooling purposes is also not required.

3A.6 WATER CIRCULATION

Specific recommendations are given in I.S. 813. The following notes are for general guidance only.

3A.6.1 PIPEWORK

It is recommended that copper tubing be used in conjunction with soldered capillary joints.

Where possible pipes should have a gradient to ensure air is carried naturally to air release points and that water flows naturally to drain cocks.

Except where providing useful heat, pipes should be insulated to avoid heat loss and in particular to avoid the possibility of freezing. Particular attention should be paid to pipes passing through ventilated areas such as under floors, loft space, and void areas.

3A.6.2 AUTOMATIC BY-PASS

The appliance has a built-in automatic by-pass, consequently there is no requirement for an external by-pass, however the design of the system should be such that it prevents boiler 'cycling.

3A.6.3 DRAIN COCKS

These must be located in accessible positions to facilitate draining of the appliance and all water pipes connected to the appliance.

3A.6.4 AIR RELEASE POINTS

These must be positioned at the highest points in the system where air is likely to be trapped. They should be used to expel trapped air and allow complete filling of the system.

3A.6.5 EXPANSION VESSEL

The appliance has an integral expansion vessel to accommodate the increased volume of water when the system is heated. It can accept up to 10 litres of expansion from within the system, generally this is sufficient, however if the system has an unusually high water content, it may be necessary to provide additional expansion capacity.

3A.6.6 FILLING POINT

A method for initial filling of the system and replacing water lost during servicing etc. has been provided. You should ensure this method of filling complies with the local water authority regulations.

3A.6.7 LOW PRESSURE SEALED SYSTEM

An alternative method of filling the system would be from an independent make-up vessel or tank mounted in a position at least 1 metre above the highest point in the system and at least 5 metres above the boiler (fig. 5).

The cold feed from the make-up vessel or tank must be fitted with an approved non-return valve and stopcock for isolation purposes. The feed pipe should be connected to the return pipe as close to the boiler as possible.

3A.6.8 FREQUENT FILLING

Frequent filling or venting of the system may be indicative of a leak. Care should be taken during the installation of the appliance to ensure all aspects of the system are capable of withstanding pressures up to at least 3 bar.

3A.7 ELECTRICAL SUPPLY

The appliance is supplied for operation on 230V @ 50Hz electrical supply; it must be protected with a 3-amp fuse. The method of connection to the mains electricity supply must allow for complete isolation from the supply. The preferred method is by using a double-pole switch with a contact separation of at least 3 mm. The switch must only supply the appliance and its corresponding controls, i.e. time clock, room thermostat, etc.

3A.8 SHOWERS

If the appliance is intended for use with a shower, the shower must be thermostatically controlled and be suitable for use with combination boiler.

3A.9 MOUNTING ON A COMBUSTIBLE SURFACE

If the appliance is to be fitted on a wall of combustible material, a sheet of fireproof material must protect the wall.

3A.10 TIMBER FRAMED BUILDINGS

If the appliance is to be fitted in a timber framed building, it should be fitted in accordance with I.S. 813 and local Building Regulations.

The Institute of Gas Engineers publication (IGE/UP/7) 'Guide for Gas Installations in Timber Frame Buildings' gives specific advice on this type of installation.

3A.11 CONDENSATE DISPOSAL

When choosing a location for the boiler, consideration should be given to the disposal of the condensate discharge into a suitable drain or soil pipe. The condensate outlet pipe must be connected to the drain in accordance with building regulations or other rules in force.

3A.12 INHIBITORS

Vokera recommend that a neutral inhibitor is used to protect the heating system from the effects of corrosion and/or electrolytic action. The inhibitor must be administered in strict accordance with the manufacturers* instructions.

*Fernox and Sentinel manufacture products that have proved suitable for use with Vokera appliances. Vokera Ltd. cannot comment on the suitability of any other such product with our appliances.

3A.13 DECLARATION OF CONFORMITY

A Declaration of Conformity (as defined in I.S. 813) must be provided on completion of the installation.

A copy of the declaration must be given to the responsible person and also to the gas supplier if required.

4.1 DELIVERY

Due to the weight of the appliance it may be necessary for two people to lift and attach the appliance to its mounting. The appliance is contained within a heavy-duty cardboard carton. Lay the carton on the floor with the writing the correct way up.

4.2 CONTENTS

Contained within the carton is:

- the boiler;
- the fixing jig and wall bracket;
- template;
- an accessories pack containing appliance service connections and washers;
- the instruction pack containing the installation & servicing instructions, user instructions, Benchmark logbook, guarantee registration card and a 3-amp fuse.

4.3 UNPACKING

At the top of the carton pull both sides open – do not use a knife – unfold the rest of the carton from around the appliance, carefully remove all protective packaging from the appliance, and lay the accessories etc. to one side. Protective gloves should be used to lift the appliance, the appliance back-frame should be used for lifting points.

4.4 PREPARATION FOR MOUNTING THE APPLIANCE

The appliance should be mounted on a smooth, vertical, non-combustible surface, which must be capable of supporting the full weight of the appliance. Care should be exercised when determining the position of the appliance with respect to hidden obstructions such as pipes, cables, etc.

When the position of the appliance has been decided – using the template supplied – carefully mark the position of the combined fixing jig and wall- mounting bracket (fig. 6A) and flue-hole (if applicable, fig. 6).

4.5 FITTING THE FLUE

The top flue outlet permits both horizontal and vertical flue applications to be considered, alternatively, the Vokera twin flue system can be utilised if longer flue runs are required.

4.5.1 CONCENTRIC HORIZONTAL FLUE

(For concentric vertical flue, see section 4.5.2).
(For twin flue applications, see section 4.5.3).
The appliance flue outlet elbow can be rotated through 360° on its vertical axis. In addition the flue may be extended from the outlet elbow in the horizontal plane (see section 2.9). A reduction must also be made to the maximum length (see table below) when additional bends are used.

Reduction for additional bends

Bend	Reduction in maximum flue length for each bend
45° bend	0.5 metre
90° bend	1.0 metre

Horizontal flue terminals and accessories

Part No.	Description	Min-Max length
0225720	Horizontal flue kit for use with add. bends & extensions	1000 mm
0225755	Telescopic extension	350 mm-500 mm
0225740	0.5 m extension	500 mm
0225745	1.0 m extension	1000 mm
0225750	2.0 m extension	2000 mm
0225730	45° bend (pair)	N/A
0225735	90° bend	N/A
0225760	Wall bracket (5)	N/A

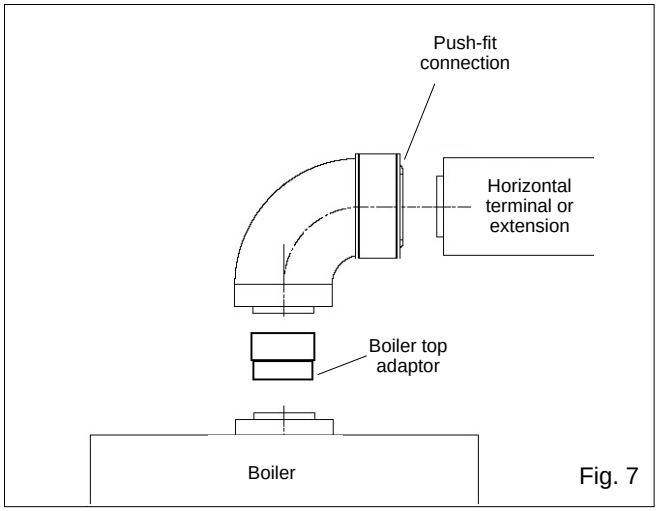

Fig. 7

Using the template provided (fig. 6), mark and drill a 125 mm hole for the passage of the flue pipe. The hole should have a 1° rise from the boiler to outside.

The fixing holes for the wall-mounting bracket and fixing jig should now be drilled and plugged, an appropriate type and quantity of fixing should be used to ensure that the bracket is mounted securely. Once the bracket has been secured to the wall, mount the appliance onto the bracket and jig assembly.

FITTING THE HORIZONTAL FLUE KIT

Using a twisting motion, connect the boiler top adaptor - supplied with the flue terminal kit - to the appliance flue outlet ensuring the male spigot of the adaptor is pushed fully into the flue outlet spigot of the boiler (fig. 7). Carefully measure the distance from the centre of the appliance flue outlet to the edge of the finished outside wall (dimension **X**). Add 45 mm to dimension **X** to give you dimension **Y** (fig 7A). Measure dimension **Y** from the terminal end of the concentric flue pipe and cut off the excess. Pass the concentric flue pipe through the previously drilled hole. Fit

the flue bend to the boiler top adaptor and insert the concentric flue pipe into the flue bend ensuring the correct seal is made.

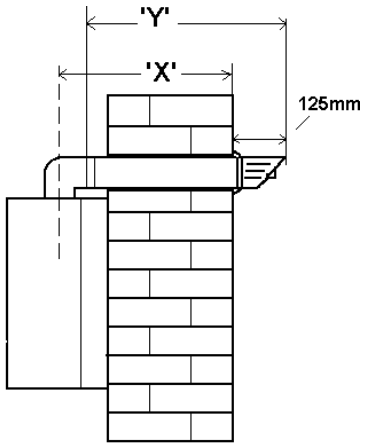

Fig. 7A "**Y**" = "**X**" + 45 mm

Using the clamp, gasket and screws supplied, secure the flue bend to the appliance flue spigot.

NOTE

You must ensure that the entire flue system is properly supported and connected.

Seal the flue assembly to the wall using cement or a suitable alternative that will provide satisfactory weatherproofing. The interior and exterior trim can now be fitted.

4.5.1.1 EXTENDING THE FLUE

Connect the bend - supplied with the terminal kit - to the top of the boiler using the boiler top adapter and clamp (supplied, fig. 7). The additional bends & extensions have push-fit connections, care should be taken to ensure that the correct seal is made when assembling the flue system. Connect the required number of flue extensions or bends (up to the maximum equivalent flue length) to the flue terminal (fig. 7 & 7B).

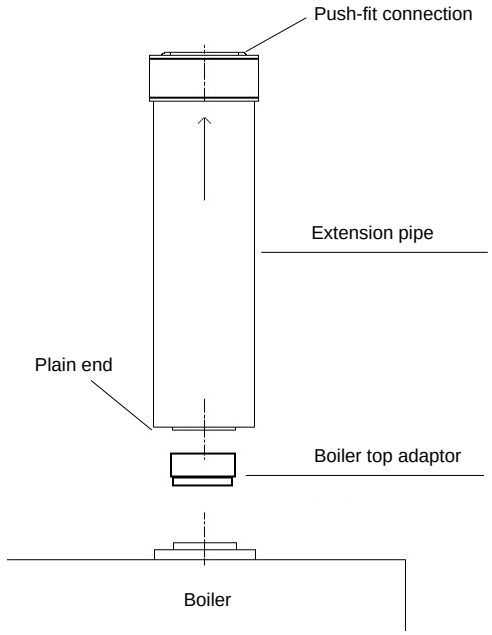

Fig. 7B

NOTE

When cutting an extension to the required length, you must ensure that the excess is cut from the plain end of the extension (fig. 7 & 7B). Remove any burrs and check that all seals are located properly.

You must ensure that the entire flue system is properly supported and connected.

Seal the flue assembly to the wall using cement or a suitable alternative that will provide satisfactory weatherproofing. The interior and exterior trim can now be fitted.

4.5.2 CONCENTRIC VERTICAL FLUE

The vertical flue terminal can be connected directly to the appliance flue outlet. Alternatively, an extension or bend can be connected to the appliance flue outlet if desired (see section 2.9), however if additional bends are fitted, a reduction must be made to the maximum flue length (see table below).

Reduction for bends

Bend	Reduction in maximum flue length for each bend
45° bend	0.5 metre
90° bend	1.0 metre

Vertical flue terminal and accessories

Part No.	Description	Min-Max length
0225725	Vertical flue terminal	1000 mm
0225770	Pitched roof flashing plate	N/A
0225765	Flat roof flashing plate	N/A
0225755	350-500 telescopic extension	350 mm-500 mm
0225740	500 mm extension	500 mm
0225745	1000 mm extension	1000 mm
0225750	2000 mm extension	2000 mm
0225730	45° bend (pair)	N/A
0225735	90° bend	N/A
0225760	Wall bracket (4)	N/A

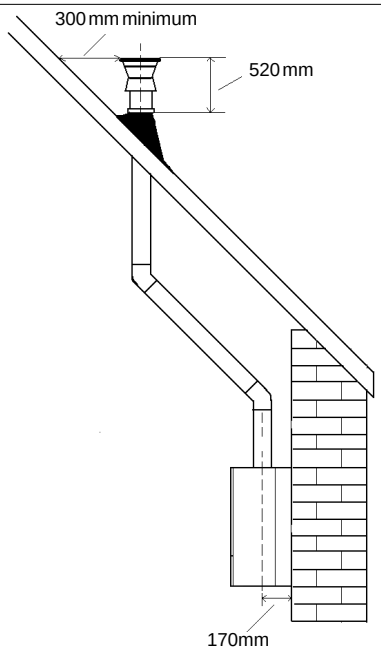

Fig. 8

Using the dimensions given in fig. 8 as a reference, mark and cut a 105 mm hole in the ceiling and/or roof.

IMPORTANT

You must ensure that the terminal is at least 300 mm from any structure or surface (fig. 8).

The vertical flue terminal is 1.0 metre in length and cannot be cut; therefore it may be necessary to adjust the height of the appliance to suit or use a suitable extension. Ensure that any horizontal sections of the flue system have a 1° fall back to the boiler (17 mm per 1000 mm).

Fit the appropriate flashing plate to the roof and insert the vertical flue terminal through the flashing plate from the outside, ensuring that the collar on the flue terminal fits over the flashing.

The fixing holes for the wall-mounting bracket and fixing jig should now be drilled and plugged, an appropriate type and quantity of fixing should be used to ensure that the bracket is mounted securely. Once the bracket has been secured to the wall, mount the appliance onto the bracket.

Secure the vertical flue terminal or intermediate flue component, to the appliance using the boiler top adaptor and 100 mm clamp supplied.

NOTE

When cutting an extension to the required length, you must ensure that the excess is cut from the plain end of the extension. Remove any burrs and check that any seals are located properly.

4.5.3 TWIN FLUE SYSTEM

The Vokera twin flue system enables greater flue distances to be achieved (see section 2.9) than that of the standard concentric flue system. It can be used for horizontal or vertical applications, however the twin flue system must be converted to the dedicated concentric flue kit for termination. It is essential that the installation of the twin flue system be carried out in strict accordance with these instructions.

GUIDANCE NOTES ON TWIN FLUE INSTALLATION

- The flue must have a fall back of 1° back to the appliance to allow any condensate that forms in the flue system to drain. Consideration must also be given to the fact that there is the possibility of a small amount of condensate dripping from the terminal.
- Ensure that the entire flue system is adequately supported, use at least one bracket for each extension.
- Extreme care must be taken to ensure that no debris is allowed to enter the flue system at any time.
- As the exhaust outlet pipe can reach very high temperatures it must be protected to prevent persons touching the hot surface.

Reduction for bends

Bend	Reduction in maximum flue length for each bend
45° bend	1.0 metre
90° bend	1.0 metre

Twin flue accessories

Part No.	Description	Length
0225805	Horizontal flue terminal	1000 mm
0225810	Vertical flue terminal	1000 mm
359	Twin adapter kit	N/A
0225770	Pitched roof flashing plate	N/A
0225765	Flat roof flashing plate	N/A
0225815	Condensate drain kit	N/A
0225820	0.25 m extension (pair)	250 mm
0225825	0.5 m extension (pair)	500 mm
0225830	1.0 m extension (pair)	1000 mm
0225835	2.0 m extension (pair)	2000 mm
0225840	45° bend (pair)	N/A
0225845	90° bend (pair)	N/A
0225850	Twin bracket (5)	N/A
0225855	Single bracket (5)	N/A

MOUNTING THE BOILER

The fixing holes for the wall-mounting bracket and fixing jig should now be drilled and plugged, an appropriate type and quantity of fixing should be used to ensure that the bracket is mounted securely. Once the bracket has been secured to the wall, mount the appliance onto the bracket.

4.5.3.1 INSTALLATION OF TWIN ADAPTOR KIT (fig. 9)

- Insert the exhaust connection manifold (**B**) onto the appliance flue outlet and secure to the flue spigot using the screws provided.
- Remove the blanking plates (located to the left of the appliance flue outlet) and – using the same screws – install the air baffle (**A**).

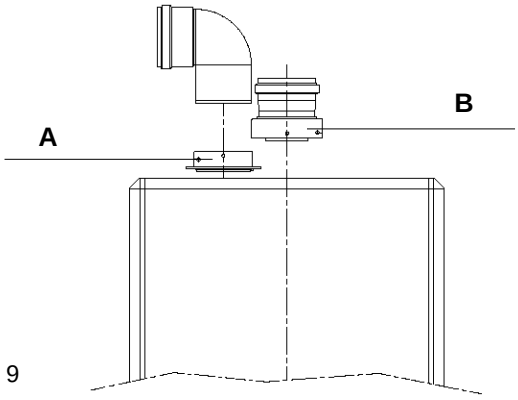

Fig. 9

4.5.3.2 HORIZONTAL TERMINATION (fig. 10)

The twin flue system must be converted to the dedicated concentric flue kit for termination.

- The horizontal terminal is supplied with a built-in converter box and cannot be shortened.
- A 130 mm hole is required for the passage of the concentric terminal through the wall.

Depending on site conditions it may be preferable to install the terminal assembly prior to fitting the twin flue pipes.

Mark and drill a 130 mm hole for the passage of the horizontal flue terminal, ensuring that there is a 1° fall back to the boiler (17 mm per 1000 mm). Insert the terminal assembly into the flue hole.

Push-fit the twin flue pipes onto the concentric to twin converter box ensuring that the exhaust pipe

connects to the exhaust connection on the concentric to twin converter.
If necessary cut the plain ends (male) of the twin flue pipes to allow connection to the concentric to twin converter.

NOTE

Before cutting twin flue pipes ensure allowances have been made for connection onto the previous piece and onto the concentric to twin converter. The last twin flue pipes must be pushed 50 mm onto the male spigots of the concentric to twin converter.

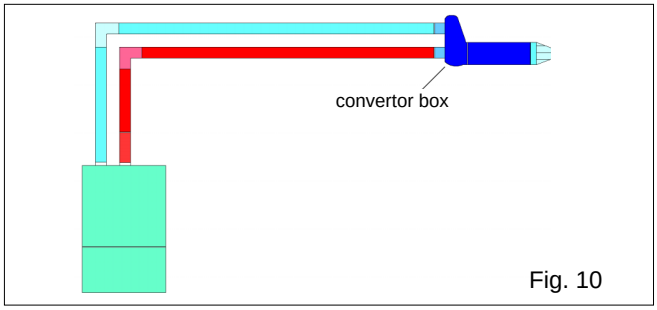

Fig. 10

NOTE

You must ensure that the entire flue system is properly supported and connected.

When cutting an extension to the required length, you should ensure that the excess is cut from the plain end of the extension. Remove any burrs and check that both seals are located properly.

Seal the flue terminal assembly to the wall using cement or a suitable alternative that will provide satisfactory weatherproofing. The interior and exterior trim can now be fitted.

4.5.3.3 VERTICAL TERMINATION (fig. 11)

The twin flue system must be converted to the dedicated concentric flue kit for termination.

- The vertical terminal is supplied with a built-in converter box and cannot be shortened.
- A 130 mm hole is required for the passage of the concentric terminal through the ceiling and/ or roof.

Depending on site conditions it may be preferable to install the terminal assembly prior to fitting the twin flue pipes.

Fit the appropriate flashing plate to the roof and insert the vertical flue terminal through the flashing plate from the outside, ensuring that the collar on the flue terminal fits over the flashing.

Push-fit the twin flue pipes onto the concentric to twin converter ensuring that the exhaust pipe connects to the exhaust connection on the concentric to twin converter.
If necessary cut the plain ends (male) of the twin flue pipes to allow connection to the concentric to twin converter.

NOTE

- Before cutting twin flue pipes ensure allowances have been made for connection onto the previous piece and onto the concentric to twin converter. The last twin flue pipes must be pushed 50 mm onto the male spigots of the concentric to twin converter.
- You must ensure that the entire flue system is properly supported and connected.
- Ensure that any horizontal sections of pipe have a 1° fall towards the appliance (17 mm per 1000mm).
- The convertor box on the vertical terminal will have to be temporarily removed when inserting the terminal through the flashing.

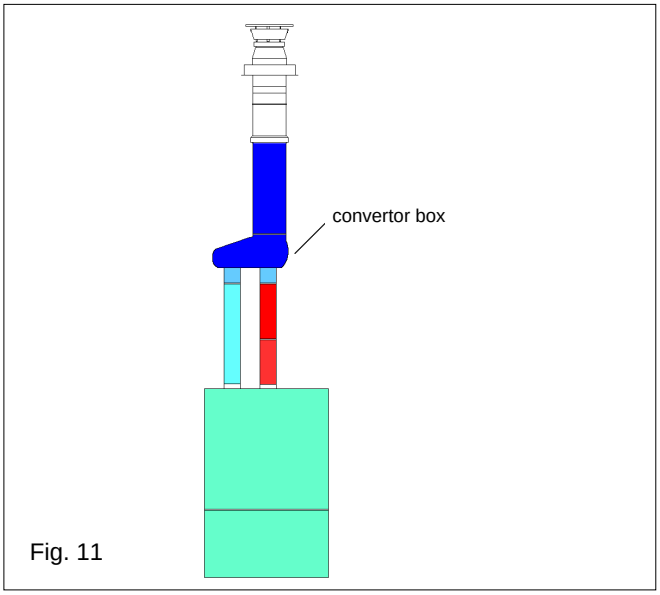

Fig. 11

4.6 CONNECTING THE GAS AND WATER

Care must be taken to ensure that the appliance and/or its ancillary components are protected from the use of a blowtorch or similar soldering equipment. The appliance is supplied with accessories that include sealing washers and service valves and connections.
When connecting pipe work to the valves, tighten the compression end first then insert the sealing washers before tightening the valve to the appliance.

NOTE

It will be necessary to hold the valve with one spanner whilst tightening with another.

4.6.1 GAS (fig. 6A & 6B)

The appliance is supplied with a 15 mm service valve, connect the supply pipe to the inlet of the valve and tighten the connecting nut.

NOTE

It will be necessary to calculate the diameter of the gas supply pipe to ensure the appliance has an adequate supply of gas.

4.6.2 FLOW & RETURN (fig. 6A & 6B)

The appliance is supplied with 22 mm service valves for the flow and return connections, connect a 22 mm pipe to the inlet of each valve and tighten both nuts.

4.6.3 SAFETY VALVE

Connect the supplied outlet connection between the safety valve outlet and fixing jig. Connect a 15 mm discharge pipe to the fixing jig and tighten. The discharge pipe must have a continuous fall away from the appliance to outside and allow any water to drain away thereby eliminating the possibility of freezing. The discharge pipe must terminate in a position where any water - possibly boiling - discharges safely without causing damage or injury, but is still visible.

4.6.4 COLD WATER INLET (fig. 6A & 6B)

The appliance is supplied with a 15 mm service valve, connect a 15 mm pipe to the inlet of the valve and tighten both nuts.

4.6.5 HOT WATER OUTLET (fig. 6A & 6B)

The appliance is supplied with a 15 mm female connector. Connect a 15 mm pipe to the supplied connector and tighten the nut.

4.7 CONDENSATE OUTLET (fig. 6B)

During normal operation the boiler produces condensate which is collected in a trap located in the lower part of the boiler. A flexible pipe (condensate outlet pipe) is connected to the outlet of the trap. The flexible pipe must be connected to a plastic waste pipe only. The plastic waste pipe must have a minimum of a 3° fall towards the drain. Any external run of pipe should be insulated to prevent the risk of freezing.

CONNECTING THE CONDENSATE OUTLET

Gently pull the condensate outlet pipe down from its location inside the boiler until approximately 250 mm protrudes from the underside of the boiler. Connect a suitable plastic (not copper) pipe (no less than 20 mm diameter) to the outlet pipe and ensure it discharges in accordance with building regulations or other rules in force.

4.8 AUTOMATIC AIR RELEASE VALVE

Mount the AAV as shown in fig. 12.

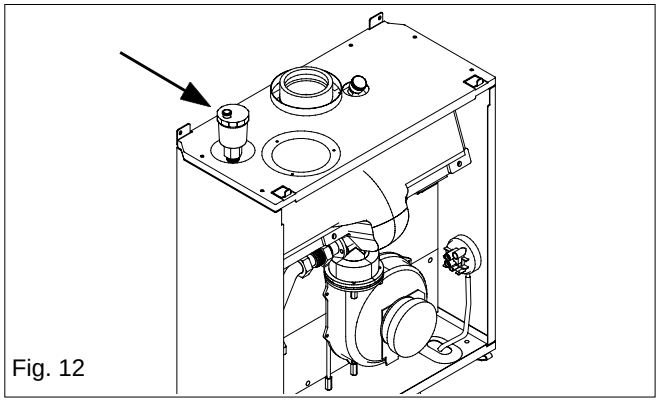

Fig. 12

4.9 ELECTRICAL CONNECTIONS

The electrical supply must be as specified in section 3. A qualified electrician should connect the electrical supply to the appliance. If controls - external to the appliance - are required, a competent person must undertake the design of any external electrical circuits, please refer to section 8 for detailed instructions.

ANY EXTERNAL CONTROL OR WIRING MUST BE SERVED FROM THE SAME ISOLATOR AS THAT OF THE APPLIANCE.

The supply cable from the isolator to the appliance must be 3-core flexible sized 0.75 mm to BS 6500. Wiring to the appliance must be rated for operation in contact with surfaces up to 90 °C.

4.9.1 ELECTRICAL INPUT BOARD

The appliance electrical input board is located behind the control fascia.

To gain access to the appliance electrical connections you must proceed as follows:

- push to release front door panel and lower to reveal controls. Loosen the 2 captive screws securing the front control panel to the lower part of the casing and lower to reveal inside of the boiler (fig. 13A);
- remove the 4 screws securing the input board cover (fig. 13B).

NOTE

The appliance comes with a factory fitted link to allow basic operation of the boiler via the keypad. If it is anticipated that external controls will be required please refer to the wiring diagrams in section 8 for more detailed information.

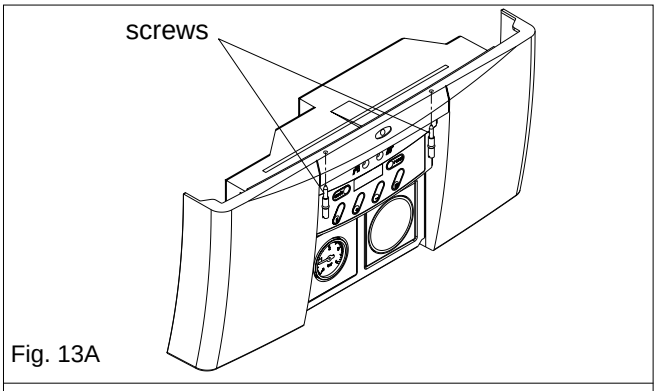

Fig. 13A

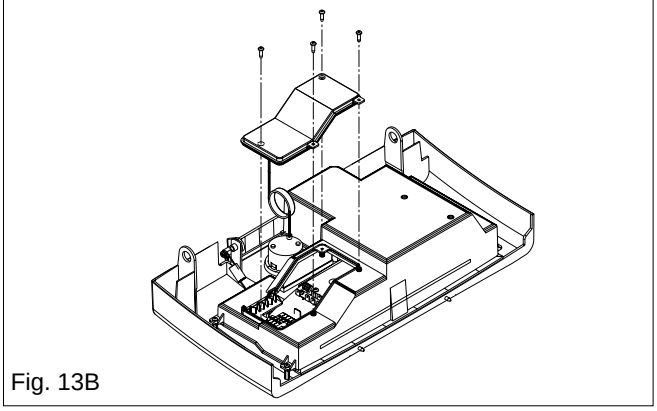

Fig. 13B

4.9.2 CONNECTING THE MAINS (230V) INPUT (fig. 14)

Remove the electrical input board cover as described in 4.9.1. Pass the cable through the cable anchorage. Connect the supply cable wires (earth, live and neutral) to their corresponding terminals on the electrical input board. Ensure that the EARTH wire is left slightly longer that the others, this will prevent strain on the EARTH wire should the cable become taut.

Do not remove the 24V-link wire (between terminals 2 & 3 on plug M7) unless additional external controls are to be fitted (see section 8). Re-fit the electrical input board cover.

The securing screw on the cable anchorage should now be tightened. This must be done before the control fascia is re-fitted in the upright position.

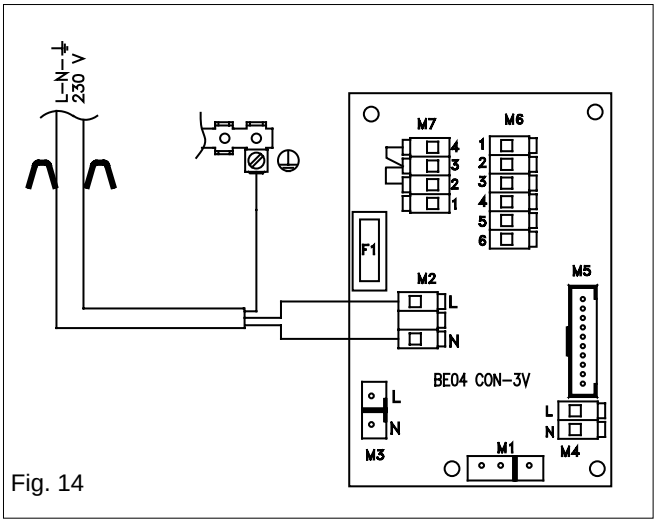

Fig. 14

4.9.3 VOKERA TIME CLOCK

The Vokera time clock (part no. 201 & 202) can be installed using the following procedure:

- Isolate the appliance from the electrical supply and remove the casing as described in 4.9.1
- Gain access to the electrical input board as detailed in 4.9.2.
- Remove the square blanking plate from the clock aperture of the control panel.
- Connect the wires to the clock as shown in fig.15A (or fig.15B if used with 24V room thermostat).
- Mount the clock to the clock aperture using the screws provided.
- Remove the factory fitted link between terminals 2 & 3 on plug M7.
- Connect the clock wires to the electrical input board as shown in fig. 15A & 15B.
- Replace the input board cover and appliance casing once the clock installation has been completed.

NOTE

If it is anticipated that a room thermostat will be required, it is essential that a 24V version is used.

4.10 CASING REMOVAL

Lower the front control panel as described in section 4.9.1.

- Locate and remove the 2 screws that secure the controls fascia to the appliance casing (fig. 13A)
- locate and remove the 2 screws that secure the casing to the back frame of the boiler (fig. 16)
- gently pull one side of the casing then the other to disengage it from the retaining clips
- lift the casing upward to disengage it from the top locating hooks and then remove
- store the casing and screws safely until required.

Re-fit in the reverse order.

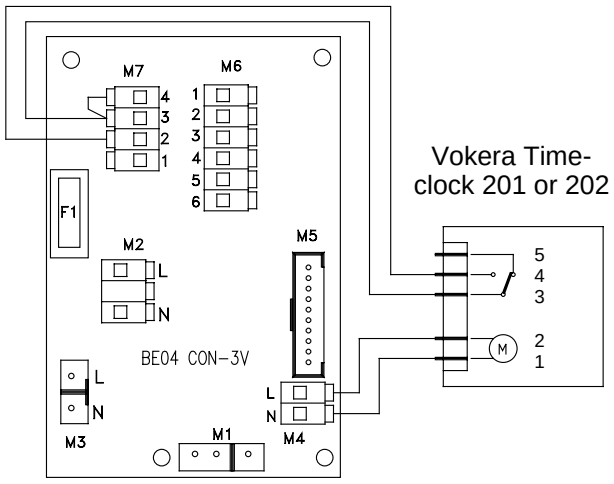

Fig. 15A

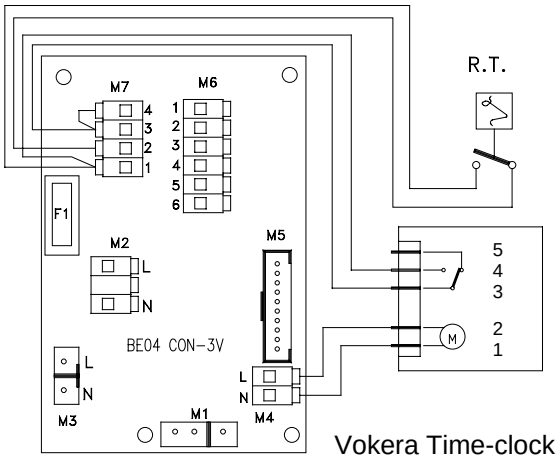

Fig. 15B

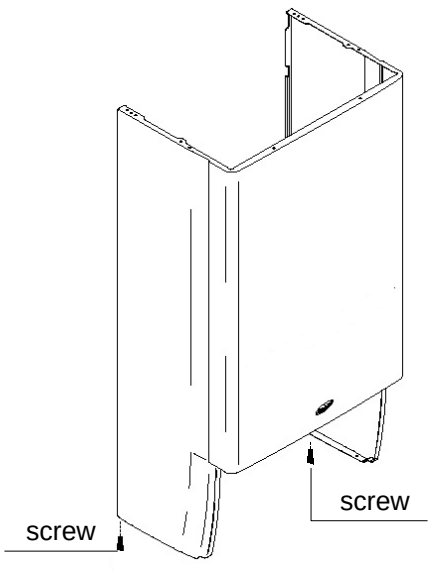

Fig. 16

5.1 GAS SUPPLY INSTALLATION

Inspect the entire installation including the gas meter, test for soundness and purge.

5.2 THE HEATING SYSTEM

The appliance contains components that may become damaged or rendered inoperable by oils and/or debris that are residual from the installation of the system, consequently it is essential that the system be flushed in accordance with the following instructions.

5.3 INITIAL FILLING OF THE SYSTEM

Ensure both flow and return service valves are open, identify the automatic air release valve (fig. 12) and loosen the dust cap by turning the cap anti-clockwise one full turn.

IMPORTANT, THERE ARE NO MANUAL AIR RELEASE VALVES LOCATED ON THE APPLIANCE. Ensure all manual air release valves located on the heating system are closed.

Identify filling/inlet valve found at the base of the appliance (fig. 6A). The filling loop may have been disconnected from the filling/inlet valve and heating flow valve. If so, reconnect unscrewing the caps as necessary.
The filling/inlet valve has 3 positions (fig. 17):

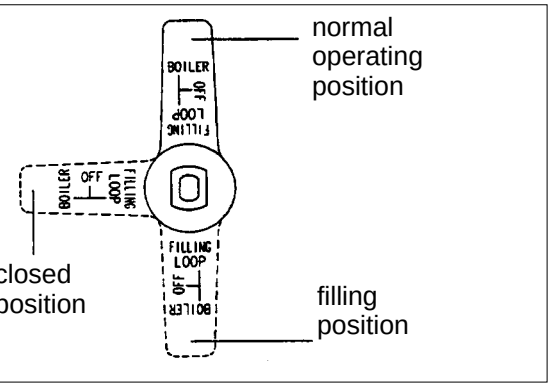

Fig. 17

- Vertically up - normal operating position
- Turn to the left to horizontal - closed position
- Vertically down - filling position

To fill, slowly turn the handle of the filling/inlet valve from the closed position towards the filling position. Mains water will be heard to enter the system/boiler. As the water enters the system/ boiler the pressure gauge will be seen to rise. Pressurise to between 1 bar & 1.5 bar when the system is cold. DO NOT OVERPRESSURISE. Once the desired pressure is achieved, turn the filling/inlet valve back to the closed position.

Starting with the lowest radiator open each air release tap in turn closing it only when clear water, free of bubbles, flows out. In the same away release air from any high points in the pipework.

Continue filling the system until at least 1.0 bar registers on the gauge then turn the handle of the filling/inlet valve back to the closed position;

Inspect the system for water soundness and remedy any leaks discovered.

5.4 INITIAL FLUSHING OF THE SYSTEM

The whole of the heating system must be flushed both cold and hot as detailed in section 5.8. Open all radiator or heating valves and the appliance flow & return service valves. Drain the boiler and system from the lowest points. Open the drain valve full bore to remove any installation debris from the boiler prior to lighting. Refill the boiler and heating system as described in section 5.3.

5.4 FILLING THE HOT WATER SYSTEM

Close all hot water draw-off taps.
Turn filling/inlet valve to the normal operating position (vertically up, fig. 17).
Slowly open each draw-off until clear water is discharged.

5.6 PRE-OPERATION CHECKS

Before attempting the initial lighting of the appliance, the following checks must be carried out:

- ensure all gas service valves from the meter to the appliance are open and the supply pipe has been properly purged;
- ensure the proper electrical checks have been carried out, (see section 7.7) particularly continuity, polarity, and resistance to earth;
- ensure the 3 amp fuse – supplied with the appliance – has been fitted;
- ensure the system has been filled, vented and the pressure set to 1 bar;
- ensure the flue system has been fitted properly and in accordance with the instructions;
- ensure all appliance service valves are open.

5.7 INITIAL LIGHTING

Ensure the electrical supply to the appliance is switched on. Switch the time clock or programmer to an 'on' position and ensure all external controls are also calling for heat.

The appliance will now operate in the pre-heat mode as described in section 1.2. Once the pre-heat function has been completed, the appliance will operate in the central heating mode as described in section 1.4. Should the appliance fail to ignite, refer to section 5.6 and/or section 7 (faultfinding).

5.8 FINAL FLUSHING OF THE HEATING SYSTEM

The system shall be flushed in accordance with BS 7593. If a cleanser is to be used, it shall be from a reputable manufacturer* and shall be administered in strict accordance with the manufacturers instructions.

*Both Sentinel and Fernox manufacture products that have proved suitable for use with Vokera appliances. Vokera Ltd. cannot comment on the suitability of any other such product with our appliances.

5.8.1 INHIBITORS

See Section 3 "General Requirements".

5.9 APPLIANCE OPERATING PARAMETERS

The appliance is supplied with pre-set operating parameters. Parameters 1-4 (heating and hot water settings) can be adjusted at any time,

however the remaining parameters (5 – 42) can only be accessed after entering the relevant service code, and should only be adjusted by qualified service personnel.

5.10 PARAMETERS 1 - 4

Parameters 1 - 4, are used to alter or adjust the settings for central heating and domestic hot water. Use the following table and procedure to check or adjust the relevant parameters:

Parameter	Description	Range
1	Hot water outlet temperature	40°C - 65°C
2	Hot water mode	00 = off 01 = on 02 = N/A 03 = N/A
3	Heating mode	00 = off 01 = on 03 = off (pump on continuously) 04 = on (pump on continuously)
4	Heating outlet temperature	20 °C - 90 °C

- Press the mode button until "PARA" appears in the display.
- Press the S button until the appropriate parameter is shown in the left side of the display.
- Use the + or - buttons to adjust the value of the paramater as shown in the right side of the display.
- Press the M button to store the new setting.
- Press the reset button to return to the stand-by mode.

IMPORTANT

Under no circumstances should any parameters - other than those shown above - be changed or adjusted by non competent personnel.

5.11 INFORMATION MODE

The appliance keypad can be used to display certain information on the working status of the boiler. Information such as flow & return temperature, and temperature rise can be viewed using the following table and procedure:

Step number	Information displayed
1	Temperature at flow sensor
2	Temperature at return sensor
3	Temperature at cold water inlet sensor
4	Temperature at external sensor (if present)
5	Unused
6	Required temperature (as set at parameter 1 or 4)
7	Temperature rise of flow sensor (measured in °C per second)
8	Temperature rise of return sensor (measured in °C per second)
9	Temperature rise of hot water (measured in °C per second)
A	Unused

- Press the mode button until "INFO" appears in the display.
- Press the S button until the appropriate step number is shown in the left side of the display.
- The measured value of each step is shown on the right side of the display.
- Press the mode button until "Stby" appears in the display to return to the stand-by mode.

5.12 SETTING THE SYSTEM DESIGN PRESSURE

The design pressure should be a minimum of 1 bar and a maximum of 1,5 bar.

The actual reading should ideally be 1 bar plus the equivalent height in metres (0,1 bar = 1 metre) to the highest point in the system above the base of the appliance (up to the maximum of 1,5 bar total).

N.B. The safety valve is set to lift at 3 bar/30 metres/45 psig.

To lower the system pressure to the required value, pull lever on head of safety valve to release water until the required figure registers on the pressure gauge (fig. 1).

5.13 REGULATING THE CENTRAL HEATING SYSTEM

Fully open all radiator and circuit valves and run the appliance for both heating and hot water until heated water is circulating. If conditions are warm remove any thermostatic heads. Adjust radiator return valves and any branch circuit return valves until the individual return temperatures are correct and are approximately equal.

5.14 CHECKING DYNAMIC GAS PRESSURE

Isolate the appliance from the electrical supply and remove the appliance casing as described in section 4.10. Unclip and remove the front air chamber cover.

Attach a suitable manometer to the inlet test nipple of the gas valve.

Restore the electrical supply to the boiler and generate a request for central heating via the room thermostat and/or timer.

Press the mode and + buttons at the same time, the boiler will now run at full power for 15 minutes.

The dynamic gas pressure will now be shown on the manometer, and should be 20 mbar +/- 1 mbar. If the dynamic gas pressure is out-with the tolerance range, you should contact the gas supplier for advice.

Press the + and - buttons at the same time to return to the normal operating mode.

Isolate the appliance from the electrical supply, remove the manometer from the inlet test nipple, tighten the test nipple screw, and check for soundness.

Refit the air chamber cover and appliance casing in the reverse order.

5.15 FINAL CHECKS

- ENSURE ALL TEST NIPPLES ON THE APPLIANCE GAS VALVE ARE TIGHT AND HAVE BEEN CHECKED FOR SOUNDNESS.
- ENSURE THE APPLIANCE FLUE SYSTEM IS FITTED CORRECTLY AND IS PROPERLY SECURED.
- ENSURE ALL PIPE WORK IS RE-CHECKED FOR SOUNDNESS.
- RE-FIT APPLIANCE CASING.
- COMPLETE APPLIANCE LOGBOOK.

Complete details of the boiler, controls, installation and commissioning in the logbook supplied with the boiler. This is an important document, which must be correctly completed and handed to the user. Failure to install and commission the appliance to the manufacturers instructions may invalidate the warranty.

5.16 INSTRUCTING THE USER

Hand over all documentation supplied with this appliance – including these instructions – and explain the importance of keeping them in a safe place.

Explain to the user how to isolate the appliance from the gas, water and electricity supplies, and the locations of all drain points.

Show the user how to operate the appliance and its associated controls correctly.

Show the user the location of the filling valve and how to top-up the system pressure correctly and show the location of all manual air release points.

Explain to the user how to turn off the appliance for both long and short periods and advise on the necessary precautions to prevent frost damage.

SECTION 6 SERVICING INSTRUCTIONS

6.1 GENERAL

To ensure the continued safe and efficient operation of the appliance, it is recommended that it is checked and serviced at regular intervals.

The frequency of servicing will depend upon the particular installation conditions, but in general, once per year should be adequate.

It is the law that any servicing work is carried out by competent person such as a Vokera engineer, an approved service agent, British Gas or other CORGI registered personnel.

The following instructions apply to the appliance and its controls, but it should be remembered that the central heating system will also require attention from time to time.

6.2 ROUTINE ANNUAL SERVICING

- Check the operation of the appliance and ensure it functions as described in section 7.
- Compare the performance of the appliance with its design specification. The cause of any noticeable deterioration should be identified and rectified without delay.
- Thoroughly inspect the appliance for signs of damage or deterioration especially the flue system and the electrical apparatus.
- Check and adjust – if necessary – the system design pressure (see section 5.12).
- Ensure both the burner and heat exchanger are clean and free from any debris or obstruction.
- Carry out an analysis of the flue gases (see section 7.4), and visually check the condition of the entire flue assembly.
- Compare the results with the appliance design specification. Any deterioration in performance must be identified and rectified without delay.
- Inspect all joints for signs of leakage and repair if necessary.
- Refer to the commissioning section and/or replacement of parts section for detailed instruction if required.

6.3 REPLACEMENT OF COMPONENTS

Although it is anticipated that this appliance will give years of reliable, trouble free service, the life span of components will be determined by factors such as operating conditions and usage. Should the appliance develop a fault, the fault finding section will assist in determining which component is malfunctioning.

6.4 COMPONENT REMOVAL PROCEDURE

To remove a component, access to the interior of the appliance is essential. Isolate the appliance from the electrical supply and remove the fuse. And when necessary, close all service valves on the appliance, remove the appliance casing as described in section 4.10. Drain the water content from the appliance via the safety valve. Ensure some water absorbent cloths are available to catch any residual water that may drip from the appliance or removed component. Undertake a complete commissioning check as detailed in section 5, after replacing any component.

ALWAYS TEST FOR GAS SOUNDNESS IF ANY GAS CARRYING COMPONENTS HAVE BEEN REMOVED OR DISTURBED.

6.5 PUMP HEAD (fig. 1)

Carry out component removal procedure as described in section 6.4.

Using a 4 mm Allen key or 'T' bar, unscrew and remove the four Allen screws that hold the pump in position, pull firmly on the pump head to release it from the base. Disconnect the electrical leads. Replace in the reverse order.

6.6 SAFETY VALVE (fig. 18)

Carry out component removal procedure as described in section 6.4.

Disconnect the outlet pipe from the safety valve. Remove safety valve locking screw from the underside of the appliance manifold. Pull safety valve free from manifold.

Replace in the reverse order.

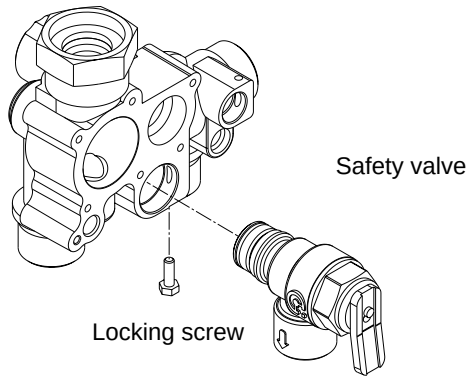

Fig. 18

6.7 AUTOMATIC AIR RELEASE VALVE (fig. 12)

Using a suitable pair of pump pliers, unscrew the AAV from its position.

Replace in the reverse order.

6.8 PRESSURE GAUGE (fig. 19)

Carry out component removal procedure as described in section 6.4.

Remove pressure gauge locking screw, located on manifold, and withdraw the pressure gauge pipe, locate the spring tabs on the pressure gauge body, push and hold tabs in, to enable extraction of the gauge from its location.

Replace in the reverse order.

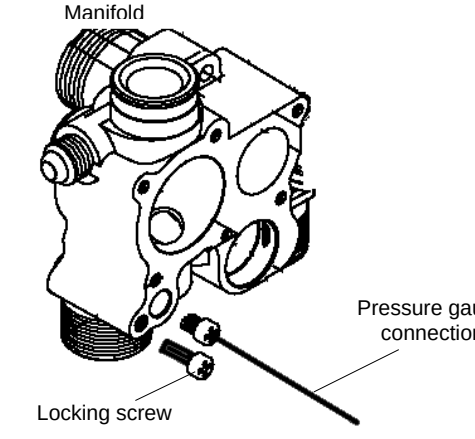

Fig. 19

6.9 NTC THERMISTORS (temperature sensors)

Carry out component removal procedure as described in section 6.4.

Cold water inlet sensor (fig. 20)

Disconnet thermistor electrical plug. Using a 13 mm spanner slacken and remove the thermistor and sealing washer.

Replace in the reverse order.

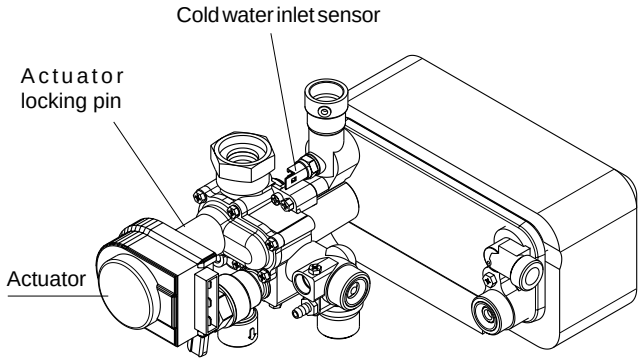

Fig. 20

Flow & return sensors (fig. 1 & 21)

Pull back protective boot and remove the 2 spade connectors. Slacken and remove the 2 securing screws.

Replace in the reverse order.

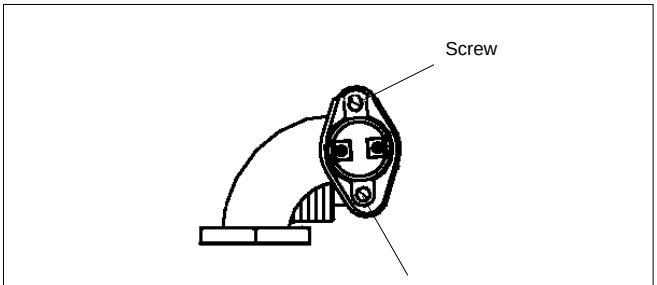

Fig. 21

6.10 PRINTED CIRCUIT BOARD (PCB) (fig. 22)

Carry out component removal procedure as described in section 6.4.

- Locate and remove the 2 screws that secure the PCB housing bracket to the underside of the air chamber.
- Remove the 4 screws that secure the housing cover to the housing.
- After carefully taking note of all wiring connections, disconnect all wiring from the PCB.
- Locate and remove the 3 screws that secure the PCB to the housing.

Replace in the reverse order.

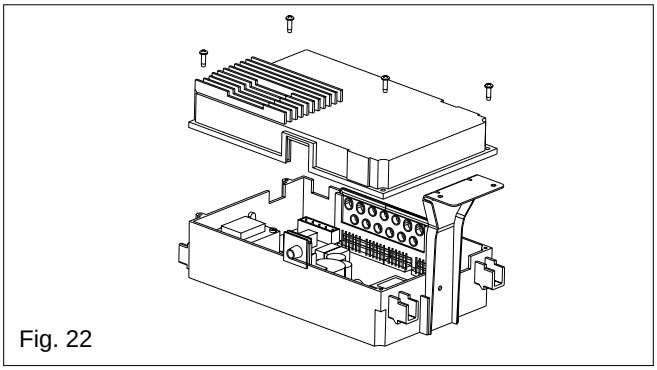

Fig. 22

6.11 GAS VALVE (fig. 23)

Carry out component removal procedure as described in section 6.4.

The gas valve must be changed as complete unit. Unclip and remove the air chamber cover. Disconnect the electrical plug from the gas valve. Disconnect silicone tube from gas valve regulator. Slacken and unscrew gas valve inlet and outlet connections. **Please note,** the sealing washers must be discarded and replaced with new sealing washers. The gas valve can now be removed. Replace in the reverse order. Refer to section seven for detailed instructions on how to set-up the gas valve. **WARNING, A GAS SOUNDNESS CHECK MUST BE CARRIED OUT.**

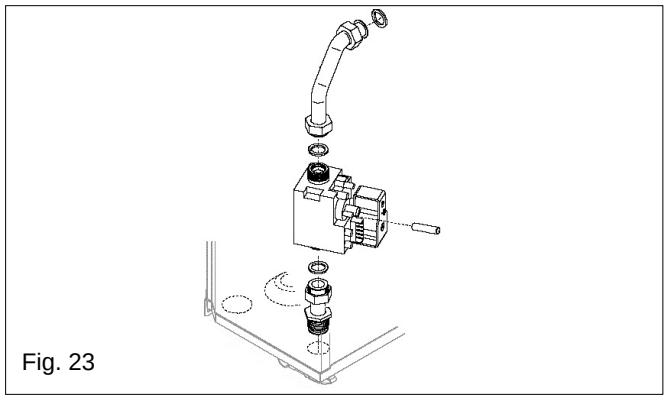

Fig. 23

6.12 FAN (fig. 23A)

Carry out component removal procedure as described in section 6.4.

Unclip and remove the air chamber cover. Disconnect the electrical plug from the fan. Locate and remove the 4 bolts that secure the fan to the pre-mix manifold. Replace in the reverse order.

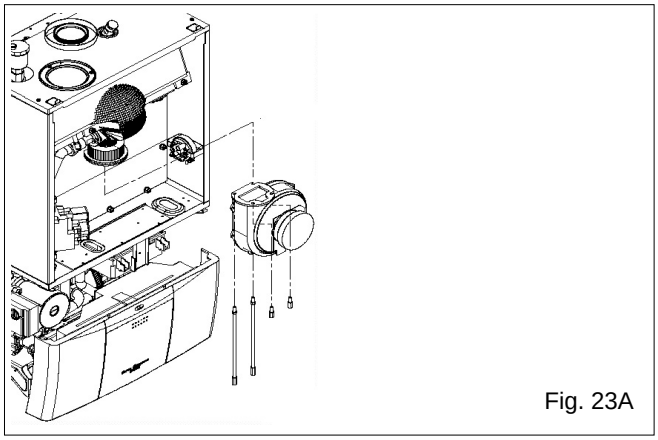

Fig. 23A

6.13 BURNER (fig. 24 & 26)

Carry out component removal procedure as described in section 6.4.

Unclip and remove the air chamber cover. Locate and remove the 8 nuts (10 mm) securing the pre-mix manifold/burner assembly.Disconnect the gas valve outlet pipe at its connection to the pre-mix manifold. Disconnect the silicone pipe from the pre-mix manifold. Gently pull away the fan/ pre-mix manifold assembly from the heat exchanger. Remove the earth wire from the burner earth tab and gently lift the burner from its location. Replace in the reverse order. **Please note,** ensure all seals are in good condition, taking care to ensure they are replaced correctly.

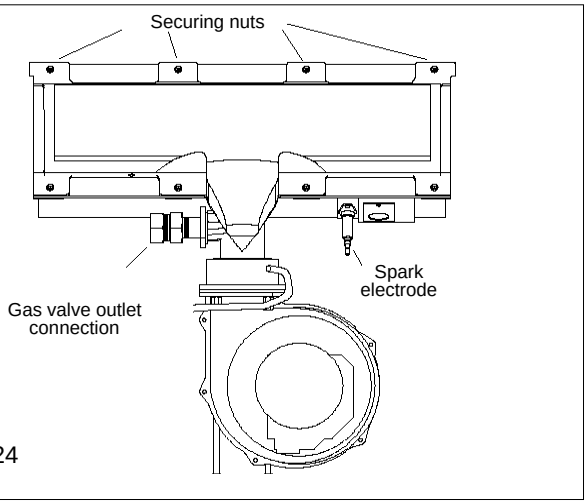

Fig. 24

6.14 ELECTRODE (fig. 24 & 25)

Carry out component removal procedure as described in section 6.4.

Unclip and remove the air chamber cover. Remove the electrode lead. Remove the 2 screws that secure the electrode to the combustion cover, and gently withdraw the electrode.

Replace in the reverse order ensuring that the electrode seal is in good condition, and that the combustion cover insulation board is undisturbed.

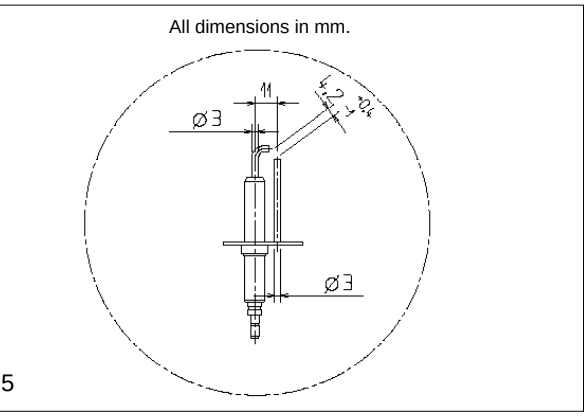

Fig. 25

6.15 INJECTOR (fig. 26)

Carry out component removal procedure as described in section 6.4.

Unclip and remove the air chamber cover.

Remove the fan as detailed in section 6.12 using a 17 mm socket, locate and unscrew the injector. Replace in the reverse order.

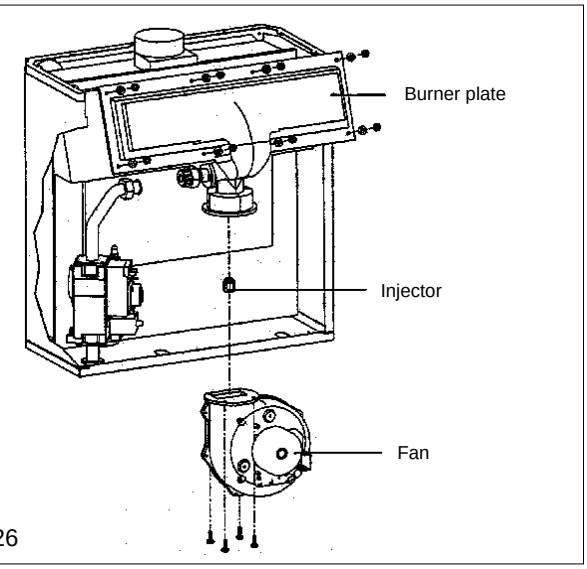

Fig. 26

6.16 DOMESTIC HOT WATER HEAT EXCHANGER (fig. 29)

Carry out component removal procedure as described in section 6.4.

Remove the PCB housing as described in section 6.10. Locate and remove both inlet and outlet securing screws. Gently ease from its location and rotate 180° clockwise the heat exchanger.

Replace in the reverse order, ensuring the rubber O' ring seals are in good condition and are correctly located.

6.17 MOTORISED VALVE ACTUATOR (fig. 29)

Carry out component removal procedure as described in section 6.4. Disconnect the electrical plug from the actuator. Remove the locking pin from the divertor valve cover. Withdraw the actuator. Replace in the reverse order.

6.18 DIVERTOR VALVE ASSEMBLY (fig. 29)

Carry out component removal procedure as described in section 6.4. Remove motorised valve actuator as described in section 6.17. Remove

the divertor valve cover by unscrewing the 4 retaining screws. The divertor valve assembly is held in place by an O' ring seal, the components are spring loaded. Care should be taken when removing the valve cover or when levering the sealing plate from its position. Replace in the reverse order, ensuring that the divertor valve spring and bobbin are seated properly.

NOTE

It's good practice to replace the O' ring seals and valve cover gasket whenever the divertor valve assembly is disturbed.

6.19 CONDENSE TRAP (fig. 27)

Carry out component removal procedure as described in section 6.4. Disconnect the pressure switch tube from the condense trap. Disconnect both the inlet and outlet connections from the trap. Carefully withdraw the trap, keeping it upright to avoid spillage. Replace in the reverse order.

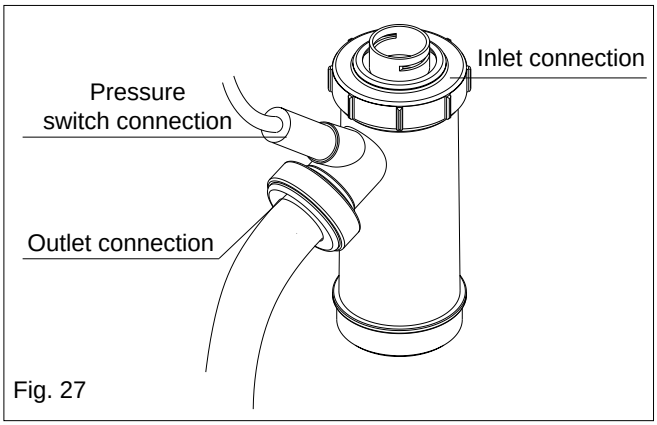

Fig. 27

6.18 CONDENSE PRESSURE SWITCH (fig. 28)

Carry out component removal procedure as described in section 6.4.

Unclip and remove the air chamber cover. Disconnect the electrical wiring and pressure tube from the pressure switch. Remove the retaining screws and/or clip.

Replace in the reverse order.

6.21 COMBUSTION COVER (fig. 30)

Carry out component removal procedure as described in section 6.4.
Unclip and remove the air chamber cover. Remove the gas valve as described in section 6.11. Remove the condense pressure switch as described in section 6.20. Disconnect the electrical connection from the fan, disconnect the spark electrode lead and earth wire from the spark electrode. Locate and remove the twelve 10 mm securing nuts. Carefully remove the combustion cover from the locating studs. Remove the combustion cover from the air chamber, withdrawing it at a slight angle from the right hand side. Replace in the reverse order, ensuring that all seals and insulation panels are undamaged and in good condition.

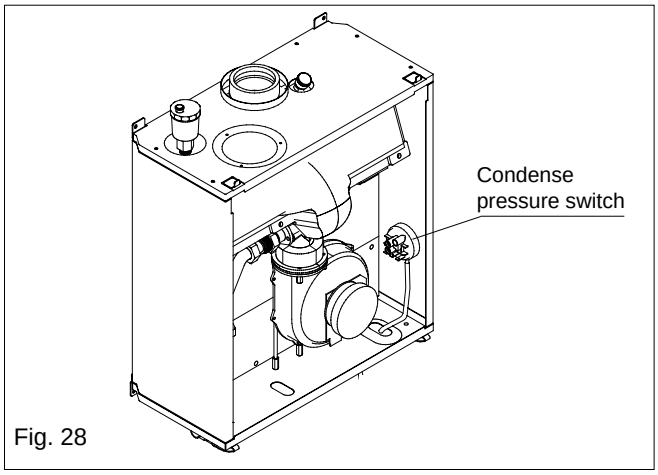

Fig. 28

6.22 EXPANSION VESSEL (fig. 1)

Due to the compact design of this appliance, removal and/or replacement of the expansion vessel may require the appliance to be removed from the wall, if this is deemed impractical, an external expansion vessel may be fitted to the return pipe as close to the appliance as possible.

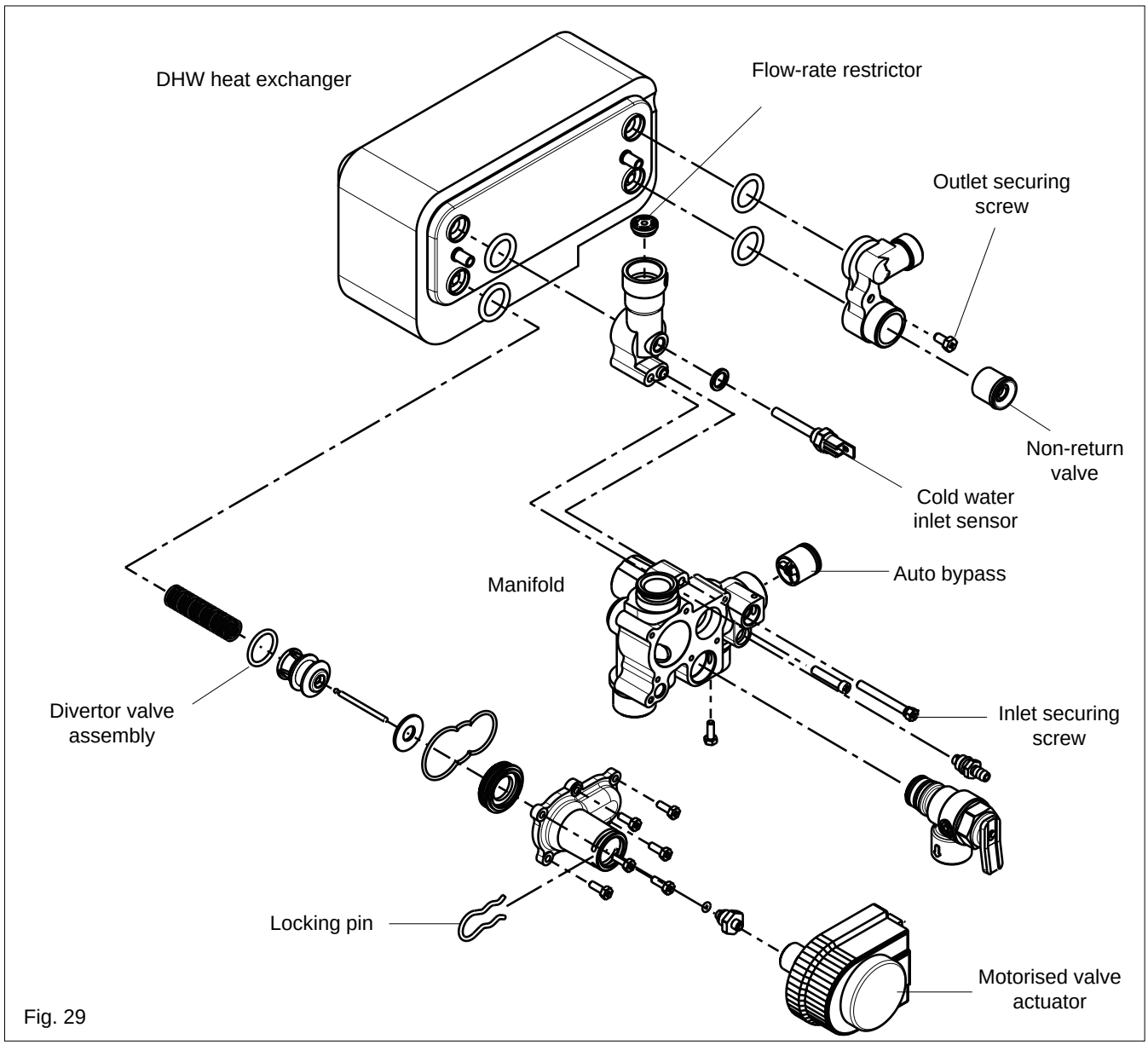

Fig. 29

6.22.1 EXPANSION VESSEL (removal, fig. 31)

Carry out component removal procedure as described in section 6.4.
Disconnect the flue from the appliance.
Disconnect the expansion vessel from the expansion pipe.
Remove the flow sensor as shown in section 6.9.
Locate and remove the 4 screws.
Remove the rear frame.
Slacken the flow pipe nut: the expansion vessel can now be removed shifting the flow pipe on the left side.
Replace in the reverse order. Ensure all seals are in good condition, taking care to ensure they are replaced correctly.

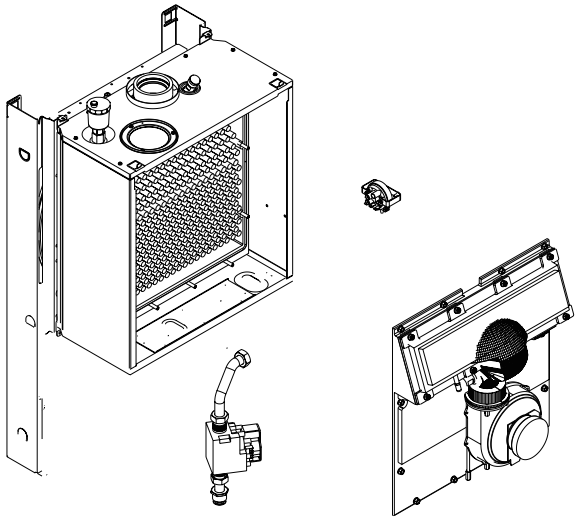

Fig. 30

6.23 INPUT PCB & STATUS PCB (fig. 32)

Carry out component removal procedure as described in section 6.4.
Refer to section 4.10 for details on how to remove casing.
Remove the 5 screws securing the control board cover. Carefully note the positions of all connections relative to the PCB that is to be removed. Remove the wiring and plugs from the PCB. Locate and remove the securing screws. Remove PCB.
Replace in the reverse order, ensuring correct configuration of wiring.

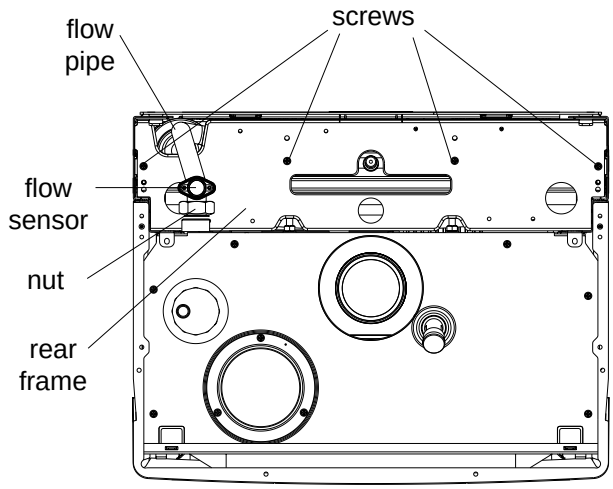

Fig. 31

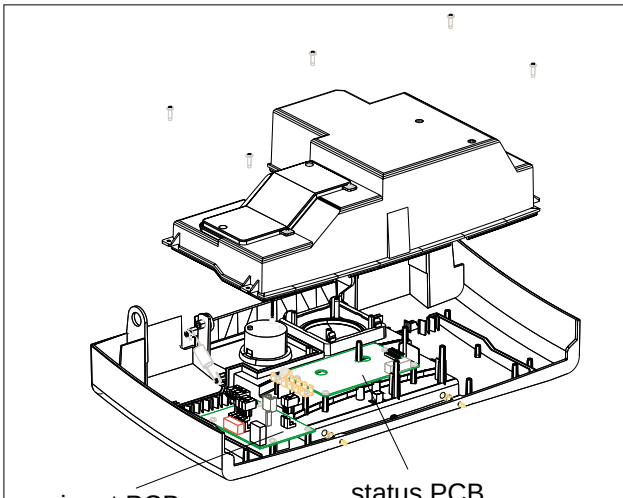

Fig. 32

7.1 CHECKING APPLIANCE OPERATION

When carrying out any repairs or servicing to the appliance, the relevant commissioning and/or set-up procedure must be undertaken to ensure the continued safe operation of the appliance. Particular attention should be made to ensure gas soundness, water soundness, and the electrical integrity of the appliance.

7.2 APPLIANCE MODE OF OPERATION

7.2.1 START-UP

When power is first supplied to the appliance it will go through a self-purge procedure whereby the pump, fan and motorised valve will be momentarily energised. The boiler will then operate in either one of the following modes:

- DHW pre-heat
- Central Heating
- DHW operation

NOTE
A DHW request has priority over the other modes of operation.

7.2.2 PRE-HEAT

When there is no demand for heating or hot water, the boiler will periodically light to pre-heat the domestic hot water heat exchanger to approximately 55 °C (measured via the cold water inlet sensor). This ensures that the appliance is at operating temperature when there is a request for domestic hot water. The parameter for the allowable temperature drop – between pre-heat operation – can be adjusted. If the appliance remains inactive for a period of 24 hours, the pump and motorised valve will be energised for a few moments to prevent these components from seizing. Should the flow temperature sensor fall below 7 °C the pump will be energised. If the flow sensor temperature falls to below 3 °C the burner will be lit and the appliance will operate at the minimum output until the temperature of the flow sensor reaches 10 °C, whereupon the pump will continue to run in pump over-run mode.

7.2.3 DOMESTIC HOT WATER MODE

When the appliance is at rest, the motorised valve is energised to the hot water position, when a demand for hot water is made the cold water temperature sensor activates the pump and fan.
When the fan is sensed to be operating correctly, the ignition sequence commences. The speed of the fan and therefore the output of the boiler is determined by the temperature of the water sensed by the return temperature sensor, consequently a high temperature at the return sensor results in a lower fan speed.

7.2.4 DHW TEMPERATURE ADJUSTEMENT

The temperature of the hot water outlet can be adjusted directly as shown in section 5.7.4 or via the operating parameters (see section 5.10). The boiler is also fitted with a flow-rate restrictor (fig. 27) that limits the actual flow of hot water to the taps or outlets. This is to ensure that the boiler maintains a reasonable outlet temperature even if the tap or outlet is fully open.

7.2.5 CENTRAL HEATING MODE

When there is a request for heat via the time clock and/or external controls the motorised valve and pump will go through a self-test function this is to ensure correct operation and valve configuration. Once the self-test function is complete, the pump and fan will be activated via the flow temperature sensor. When the fan is sensed to be operating correctly, the ignition sequence commences. The speed of the fan and therefore the output of the boiler is determined by the temperature of the water sensed by the flow & return temperature sensors, consequently a high temperature at the flow sensor results in a lower fan speed. As the water temperature increases, the temperature sensors – located on the flow and return pipes of the boiler – reduce the fan speed via the electronic circuitry. Depending on the load, either the water temperature will continue to rise until the set point is achieved or the water temperature will fall whereby fan speed will increase relative to the output required. When the boiler has reached the set point, the burner will switch off. The built-in anti-cycle device prevents the burner from re-lighting for an adjustable period of time (factory default is 92 seconds). When the temperature of the flow sensor falls below the set-point, the burner will re-light.

7.3 SERVICE PARAMETERS (5 – 42)

To check or adjust the service parameters, you must first access the service mode. This mode is only accessible in the stand-by mode.
To access the service mode:

- press and hold the mode and S buttons simultaneously for 2 seconds;
- when "**COdE**" appears in the display, press S again, "**C**" should now be shown on the left side of the display, with a random number on the right side of the display;
- using the + or - buttons, scroll until "**05**" is shown in the right side of the display;
- press M to store the code;
- press mode to access next mode;
- press reset to exit the sevice mode.

Service parameters must only be changed or adjusted by qualified service personnel

Parameter	Description	Range	Factory setting	New setting
5	Minimum setting for flow sensor	5 °C - 60° C	20 °C	
6	Minimum setting for external sensor	-20°C - 10°C	-15 °C	
7	Maximum setting for external sensor	15°C - 25°C	20 °C	
8	Frost setting for external sensor	-30°C - 10°C	-1 °C	
9	Calibration for external sensor	-5°C - 5°C	0 °C	
10	Temperature block	1°C - 60°C (00=OFF)	25 °C	
11	Booster	1-30 minutes (00=OFF)	00	
12	Night set-back temperature	0°C - 80°C	20 °C	
13	Maximum fan speed for heating (hundreds)	10 - 55	55 (5500 RPM)	
14	Maximum fan speed (units)	00 - 99	00	
15	Maximum fan speed for hot water (hundreds)	10-55	55 (5500 RPM)	
16	Maximum fan speed for hot water (units)	00 - 99	00	
17	Minimum fan speed (hundreds)	05 - 55	17 (1700 RPM)	
18	Minimum fan speed (units)	00 - 99	00	
19	Ignition fan speed	05 - 55	44* (4400 RPM)	
20	Pump over-run	01 - 99 minutes	10 minutes	
21	Pump over-run after DHW request	1-30 (1=10.2 secs.)	1 (10.2 secs.)	
22	Set point drop before re-lighting (heating)	0 °C - 20 °C	5 °C	
23	Set point overshoot before burner off (heating)	0°C - 10°C	2 °C	
24	Set point drop before re-lighting (DHW)	-5°C - 30°C	-3	
25	Set point overshoot before burner off (DHW)	-5°C - 30°C	5	
26	DHW pre-heat temperature drop before re-lighting	-5°C - 30°C	15	
27	Pre-heat temperature overshoot before burner off	-20°C - 30°C	-2	
28	Heating anti-cycle	0 - 30 (1=10.2 secs.)	9 (91.8 secs.)	
29	DHW anti-cycle	0 - 30 (1=10.2 secs.)	0 (0 secs.)	
30	Heating request delay after DHW request satisfied	0 - 30 (1=10.2 secs.)	3 (30.6 secs.)	
31	Temperature differential required for modulation	5 °C - 40 °C	25 °C	
32	Unused	0-7	-1 (=OFF)	
33	Unused		15	
34	Termo-regulation mode (external sensor)	see documentation	00	
35	Unused		08	
36	Temporary manual fan speed setting (20 minutes)	0% - 100%	-1 (= OFF)	
37	Unused		24	
38	Unused		00	
39	Unused		35	
40	Unused		10	
41	Unused		20	
42	Normal output/off/minimum output/off cycle	00 = OFF, 01 = ON	00	

*This is the setting for Natural Gas. On LPG versions, the factory setting is 30 (3000RPM)

⚠ **Don't change the factory setting of the unused parameters**

7.4 ADJUSTING THE GAS VALVE

The gas valve must be set-up or adjusted with the aid of o properly calibrated flue gas analyser.

Isolate the appliance from the electrical supply and remove the appliance casing as described in 4.10. Unclip and remove the front air chamber cover.

Set the flue gas analyser to read CO_2 and insert the probe into the flue analysis test point (fig. 1).

Restore the electrical supply to the boiler and generate a request for central heating via the room thermostat and/or timer.

Press the mode and - buttons at the same time, the boiler will now run at minimum power for 15 minutes.

Consequently, by pressing the mode and + buttons at the same time, the boiler will run on maximum power for 15 minutes.

7.4.1 MINIMUM SETTING

With the boiler operating at minimum output the CO_2 reading should be 9.8% (+/- 0.2%). If the CO_2 reading is correct, proceed to section 7.4.2. If the CO_2 reading is incorrect, the minimum gas pressure must be adjusted as follows:

- Using a suitable screwdriver, very slowly turn the minimum adjustment screw (fig. 33) – clockwise to increase, counter clockwise to decrease – until the correct value is displayed on the CO_2 analyser (allow time for the analyser to stabilise).

- Using the procedure detailed in section 7.4, change the fan speed momentarily from minimum to maximum, then back to minimum.
- Check that the correct value is still being obtained. If not, repeat the above procedure.

7.4.2 MAXIMUM SETTING

The maximum setting must only be checked and/ or adjusted after the correct minimum setting has been verified. Using the procedure detailed in section 7.4, change the power from minimum to maximum.

With the boiler operating at maximum output the CO2 reading should be 9.8% (+/- 0.2%). If the CO2 reading is correct, press the + and - buttons at the same time to return to the normal operating mode . If the CO_2 reading is incorrect, the maximum gas pressure must be adjusted as follows:

- Using a suitable screwdriver, very slowly turn the maximum adjustment screw (fig. 33) – clockwise to increase, counter clockwise to decrease – until the correct value is displayed on the CO_2 analyser (allow time for the analyser to stabilise).
- Using the procedure detailed in section 7.4, change the power momentarily from maximum to minimum, then back to maximum.
- Check that the correct value is still being obtained. If not, repeat the above procedure.
- Press the + and - buttons at the same time to return to the normal operating mode.

Isolate the appliance from the electrical supply and remove the analyser test probe from the analysis test point and refit cap. Refit the air chamber cover. Refit appliance casing.

NOTE

You should ensure that all radiators or heat emitters are fully open during the above procedures. This will ensure that the fan speed (output) of the boiler is not compromised due to a high flow temperature.

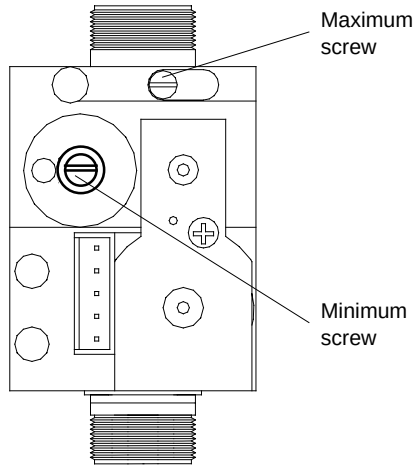

Fig. 33

7.5 1ST DIGIT STATUS CODE

When the boiler is operating normally (without fault), the first digit of the display shows the current status of the boiler whilst the right side will show the relevant temperature.

Status	1st digit	Right
Standby	0	CH inlet temp.
Purge	1	Flow temperature
Ignition	2	Flow temperature
CH mode	3	Flow temperature
DHW mode	4	Flow temperature
Waiting for fan	5	Flow temperature
Built-in delay	6	Flow temperature
CH over-run	7	Flow temperature
DHW over-run	8	Flow temperature
Temporary fault condition	9/b	Flow temp./temporary fault code
Combustion test at maximum output	H	Flow temperature
Combustion test at minimum output	L	Flow temperature
3-way valve operation	A	Flow temperature
Manual operation of fan	t	Flow temperature

7.6 TEMPORARY FAULT CODES

The built-in fault diagnostic system automatically displays a unique fault code that can be used to determine why the boiler has temporarily locked out.

Code	Reason
b 18	Flow sensor above 95 °C
b 19	Return sensor above 95 °C
b 24	Temperature differential inverted
b 25	Excessive temperature rise
b 26	Condensate trap blocked
b 28	No signal from fan
b 29	Incorrect signal from fan
b 30	Temperature differential exceeded
b 65	Insufficient fan speed for ignition

7.7 FINAL FAULT CODES

When a volatile lockout condition occurs, or a temporary fault condition has not been corrected, the appliance will be permanently locked out and a manual reset will be required.

Code	Reason
E 00	False flame
E 02	No flame detected
E 03	Internal fault (PCB)
E 04	Appliance lockout and power failure
E 05	Internal fault (PCB)
E 06	Internal fault (PCB)
E 07	Internal fault (PCB)
E 11	Internal fault (PCB)
E 12	Under-floor system temperature fault
E 13	Internal fault (PCB)
E 14	Internal fault (PCB)
E 15	Internal fault (PCB)
E 16	Internal fault (PCB)
E 17	Internal fault (PCB)
E 18	Flow sensor temperature exceeded
E 19	Return sensor temperature exceeded
E 25	Excessive temperature rise
E 28	No signal from fan
E 29	Incorrect signal from fan
E 30	Temperature differential exceeded
E 31	Short circuit on flow sensor
E 32	Short circuit on return sensor
E 33	Short circuit on inlet sensor
E 36	Open circuit on flow sensor
E 37	Open circuit on return sensor
E 38	Open circuit on inlet sensor
E 44	Internal fault (PCB)
E 60	Parameter anomaly
E 65	Not enough fan driving force

7.8 DIAGNOSTIC RECALL

In addition to displaying a fault code, the appliance memorises the operating conditions at the time of lockout, this information can be recalled and displayed using the following procedure:

1st digit shows	Right display shows
1	Most recent fault code
2	Appliance status at time of fault
3	Flow sensor temperature at time of fault
4	Return sensor temperature at time of fault
5	Inlet sensor temperature at time of fault
6	External sensor temperature at time of fault

- access the appliance service mode as detailed in section 7.3
- press the mode button until "**ERRO**" appears in the display
- press the S button to recall the information as detailed below
- press the mode button to exit Error mode
- press the reset button to exit the appliance service mode.

7.9 CHECKING THE EXPANSION VESSEL

Carry out the component removal procedure as described in section 6.4. You must ensure that the boiler is completely drained of water.

Using a suitable pressure gauge, remove dust cap on expansion vessel and check the charge pressure. The correct charge pressure should be 1.0 bar ± 0.1 bar. If the charge pressure is less, use a suitable pump to increase the charge.

Please note, you must ensure the safety valve is in the open position whilst re-charging takes place. Replace the dust cap and carry out the relevant commissioning procedure.

7.10 EXTERNAL FAULTS

Before carrying out any fault-finding or component replacement, ensure the fault is not attributable to any aspect of the installation.

For example, external wiring fault, service valves closed, gas supply turned off, etc. The table below may assist in identifying some common installation faults.

Fault code displayed	Possible cause
E 02	Gas turned off
	Air in gas pipe
	Insufficient gas
b/E 18	Pump seized
	Flow/return service valve closed
E 36	Flow sensor cable disconnected
E 37	Return sensor cable disconnected
E 38	Cold water inlet sensor cable disconnected

7.11 ELECTRICAL CHECKS

Any electrical checks must be carried out by a suitably qualified person.

7.11.1 EARTH CONTINUITY TEST

Isolate the appliance from the electrical supply, and using a suitable multi-meter carry out a resistance test. Connect test leads between an appliance earth point and the earth wire of the appliance supply cable. The resistance should be less than 1 ohm. If the resistance is greater than 1 ohm check all earth wires and connectors for continuity and integrity.

7.11.2 SHORT CIRCUIT CHECK

Isolate the appliance from the electrical supply, and using a suitable multi-meter, carry out a short circuit test between the Live & Neutral connections at the appliance input board (fig.14).

Repeat above test on the Live & Earth connections at the appliance input board (fig.14).

NOTE

Should it be found that a fuse has failed but no fault is indicated, a detailed continuity

Check will be required to trace the fault. A visual inspection of components may also assist in locating the fault.

7.11.3 POLARITY CHECK

With the appliance connected to the electrical supply and using a suitable multi-meter, carry out the following voltage tests:

- connect test leads between the Live & Neutral connections at the appliance input board (fig.14). The meter should read approximately 230V ac. If so proceed to next stage. If not, see section 7.11.4.
- connect test leads between the Live & Earth connections at the appliance input board (fig.14) the meter should read approximately 230V ac. If so proceed to next stage. If not, see section 7.11.4.
- connect test leads between the Neutral & Earth connections at the appliance input board (fig.14) the meter should read approximately 0 – 15Vac. If so polarity is correct. If not, see section 7.11.4.

7.11.4 REVERSED POLARITY OR SUPPLY FAULT

Repeat the above tests at the appliance isolator, if testing reveals correct polarity and/or supply at the isolator, re-check wiring and connections between the isolator and the appliance.

If tests on the isolator also reveal reversed polarity or a supply fault, consult the local electricity supplier for advice.

7.11.5 RESISTANCE TO EARTH CHECK

Isolate the appliance from the electrical supply, and using a suitable multi-meter carry out a resistance test. Connect test leads between the Live & Earth connections at the appliance input board (fig.14). If the meter reads other than infinity there is a fault that must be isolated, carry out a detailed continuity check to identify the location of the fault.

IMPORTANT

These series of checks must be carried out before attempting any fault-finding procedures on the appliance. On completion of any task that required the disconnection and re-connection of any electrical wiring or component, these checks must be repeated.

7.11.6 FUSES

The appliance is equipped with spare fuses. These fuses are located on the covers of the input board and main PCB respectively. If a fuse has blown it is usually indicative of an external wiring fault or a faulty component such as the pump, fan, valve actuator, etc. Under no circumstances should a blown fuse be replaced with one of a higher rating.

7.12 FAULT FINDING

BEFORE ATTEMPTING ANY FAULT DIAGNOSIS OR REPAIR THE FOLLOWING PROCEDURE SHOULD BE CARRIED OUT:

- carry out the relevant electrical checks as detailed in section 7.11;
- disconnect any external wiring from plug M7 (terminals 2 & 3) and replace with a solid link wire;
- ensure the appliance is protected – externally – by a 3-amp fuse.

IMPORTANT

The Hydra boiler utilises 24V switching. Any external controls that are directly connected to the boiler must be suitable for 24V applications and shall be voltage free. Under no circumstances should a 230V supply be connected to plug M7.

7.12.1 FAULT FINDING TESTS

If a lockout code is displayed on digits 3 & 4, please refer to section 7.6 for the cause of the lockout.

FAULT	GO TO
No display, boiler inactive	Test 1
No display, valve actuator working (press reset to test)	Test 1A
No display, pump running	Test 1A
No display, pump running, fan speed alternating	Test 1A
No display, boiler working OK	Test 1A
Pump failure	Test 2
Fan fault	Test 3
Ignition fault	Test 4

7.12.2 WIRING DIAGRAMS

Figures indicate the positions of all plugs, fuses and internal wiring configuration.

7.12.3 FAULT FINDING TEST '1'

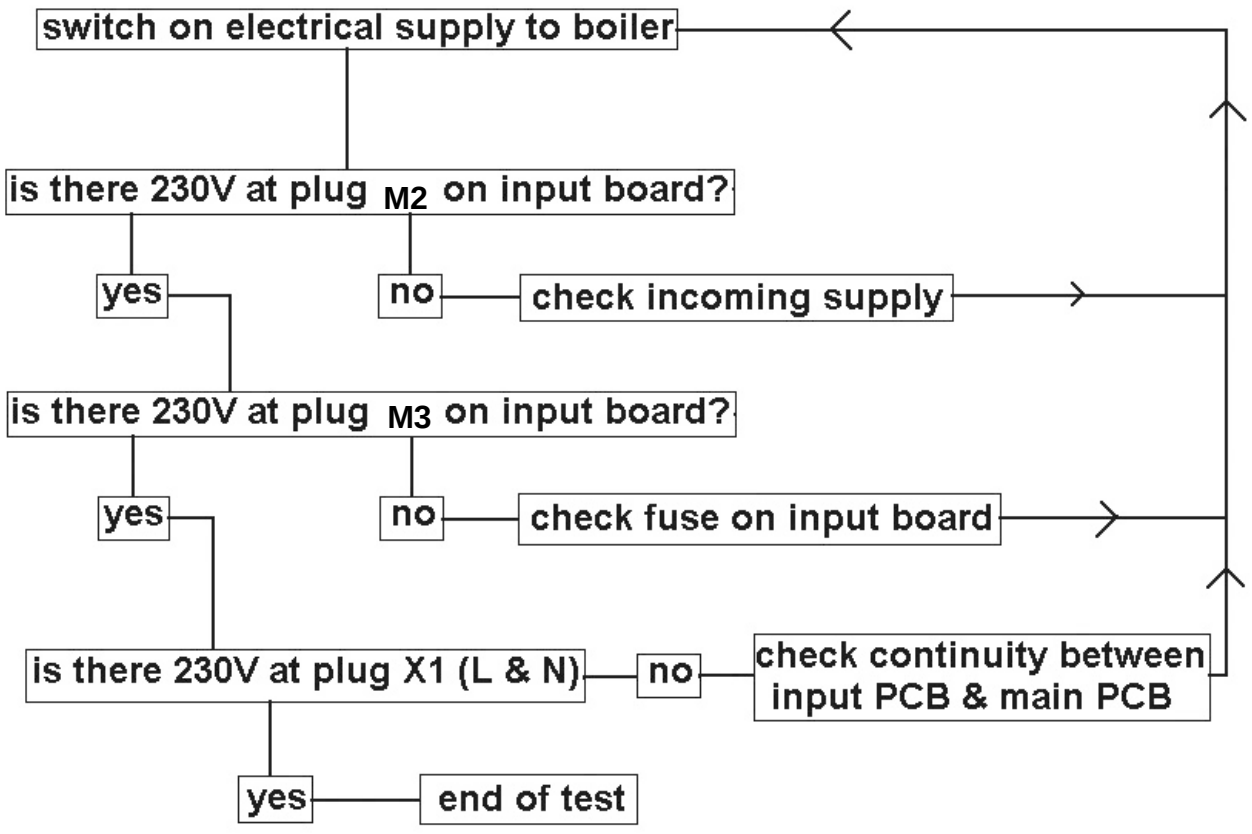

7.12.4 FAULT FINDING TEST '1A'

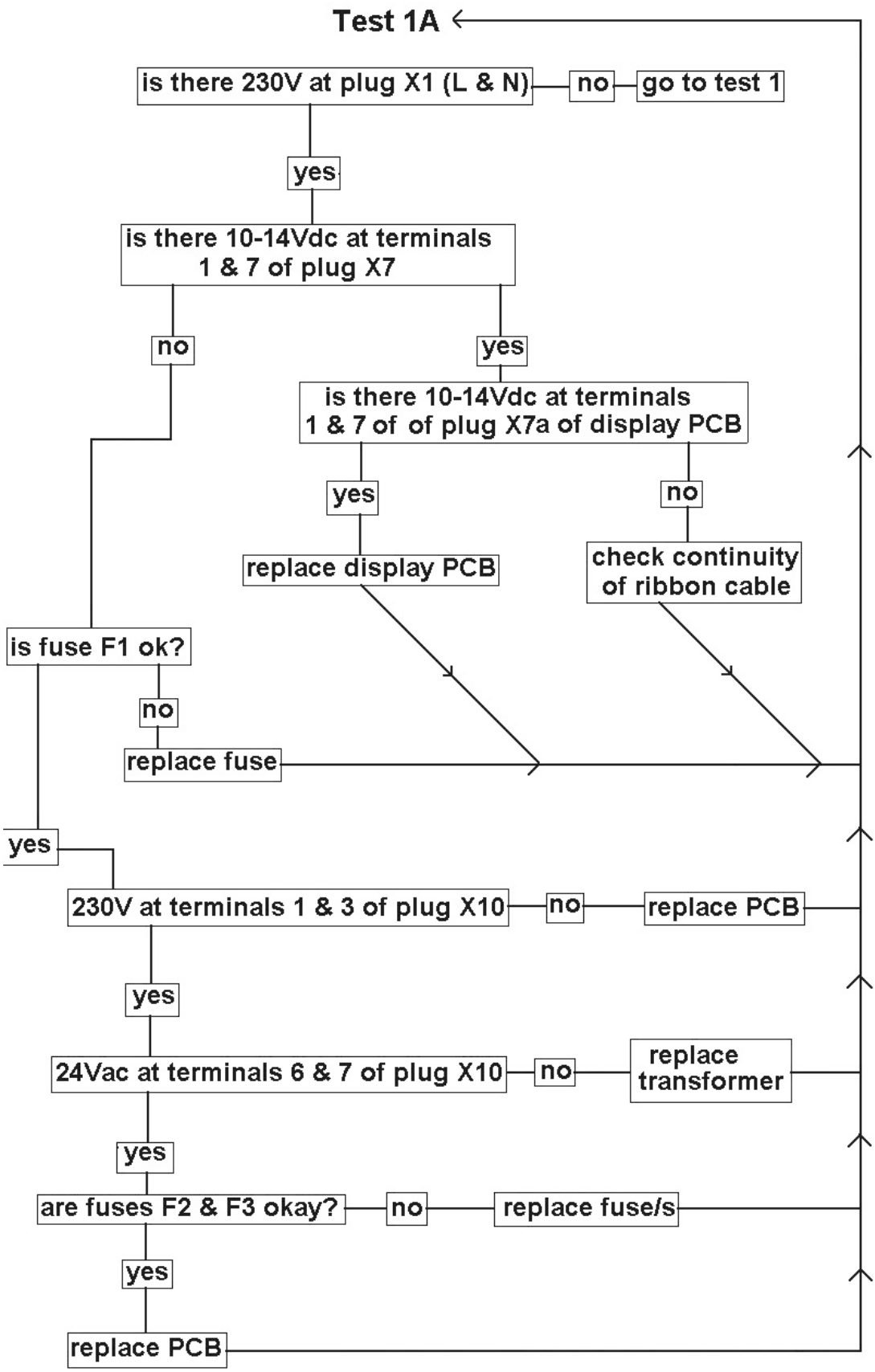

7.12.5 FAULT FINDING TEST '2'

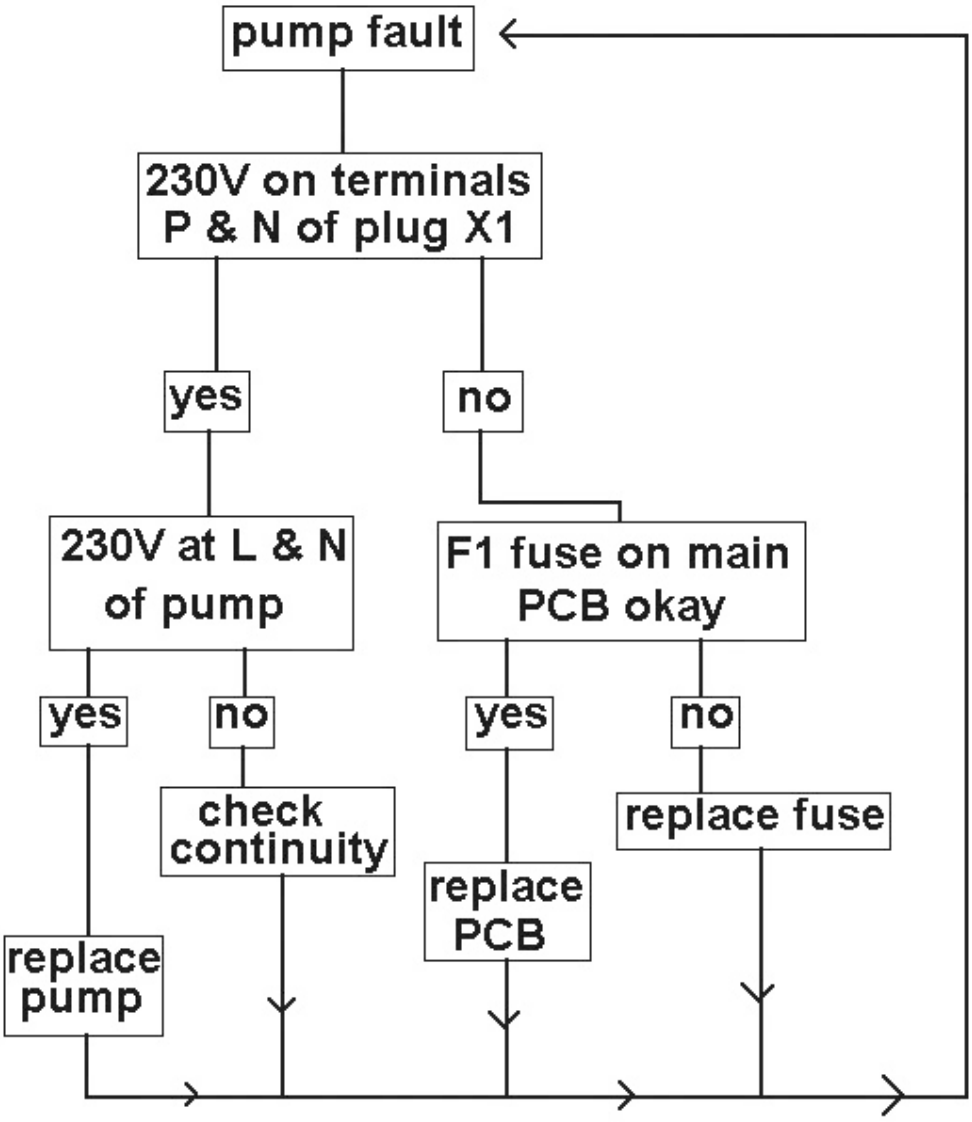

7.12.6 FAULT FINDING TEST '3'

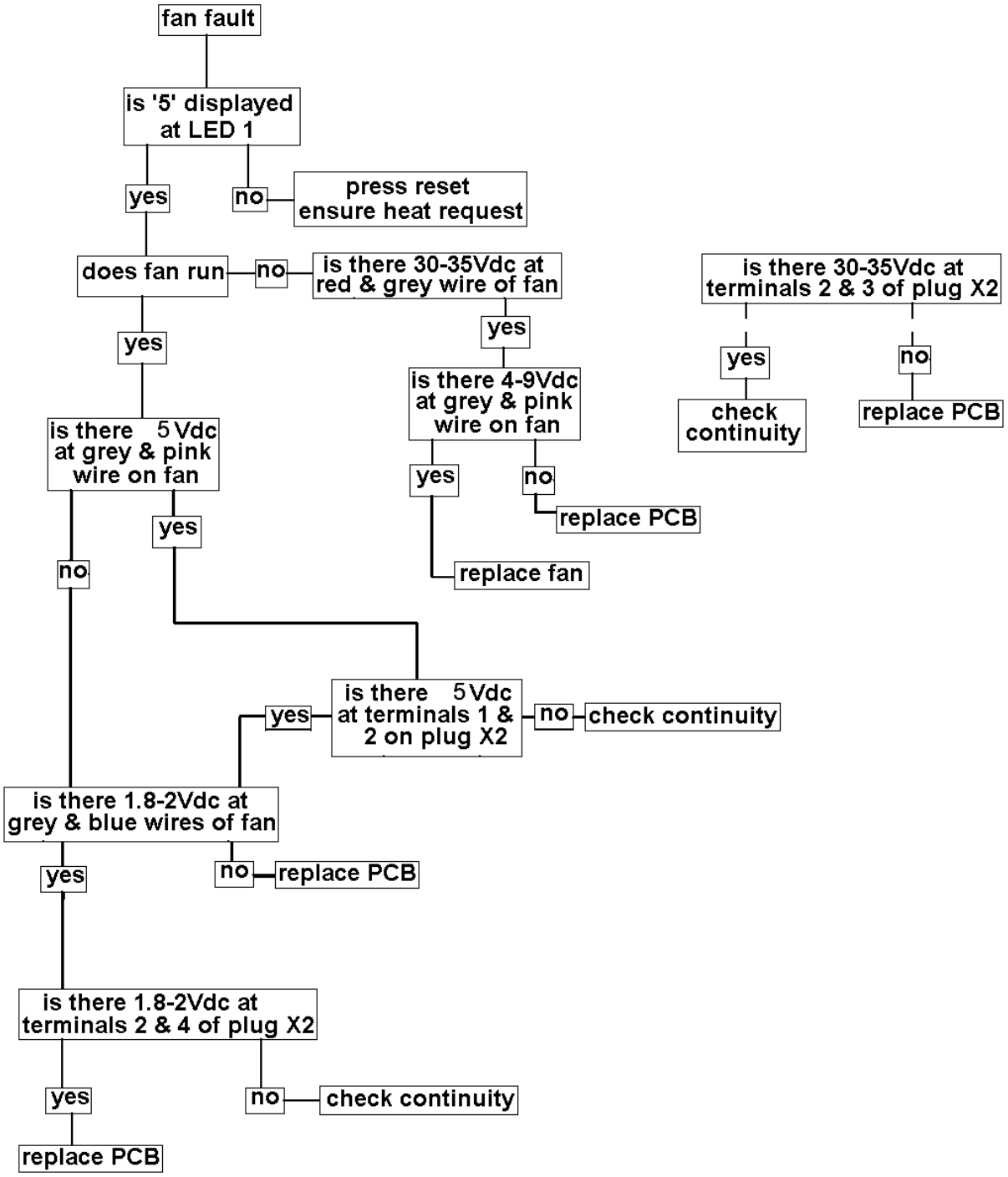

7.12.7 FAULT FINDING TEST '4'

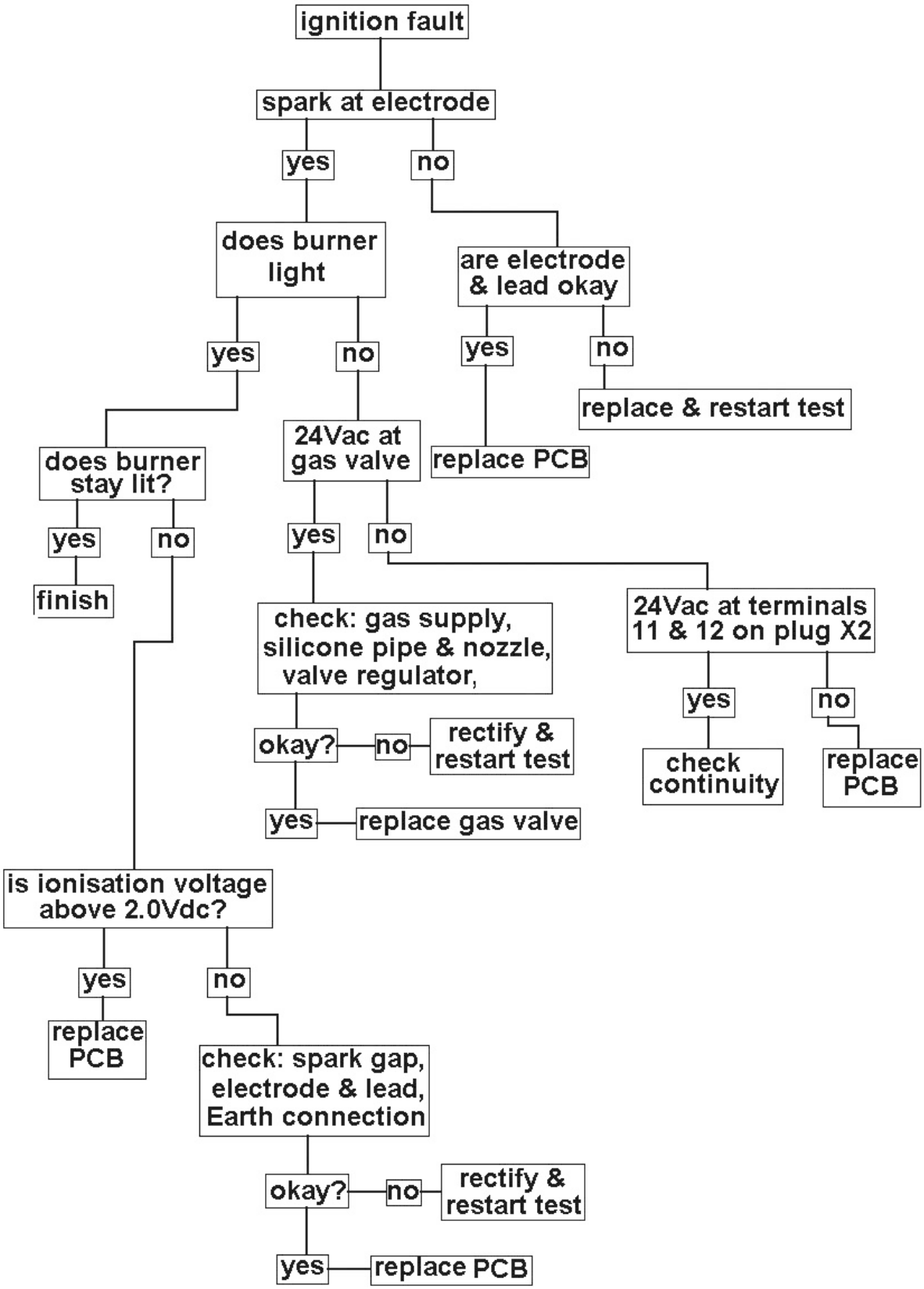

IONISATION CHECK: Terminal 5 on plug X2 to Earth

SECTION 8 WIRING DIAGRAMS

8.1 IMPORTANT

The Hydra boiler utilises 24V switching. Any external controls that are directly connected to the boiler must be suitable for 24V applications and shall be voltage free. Under no circumstances should a 230V supply be connected to plug M7.

8.2 EXTERNAL CONTROLS IMPORTANT (see section 8.1)

If additional or alternative controls are required, they must be connected to the boiler as shown. In particular, it is essential that any external control connected to terminals M7.2 & M7.3 is voltage free and suitable for 24V applications.

NOTE

Guidance on the recommended practice for the installation of external controls, can be found in CHeSS – HC1/HC2 (www.energy-efficiency.gov.uk).

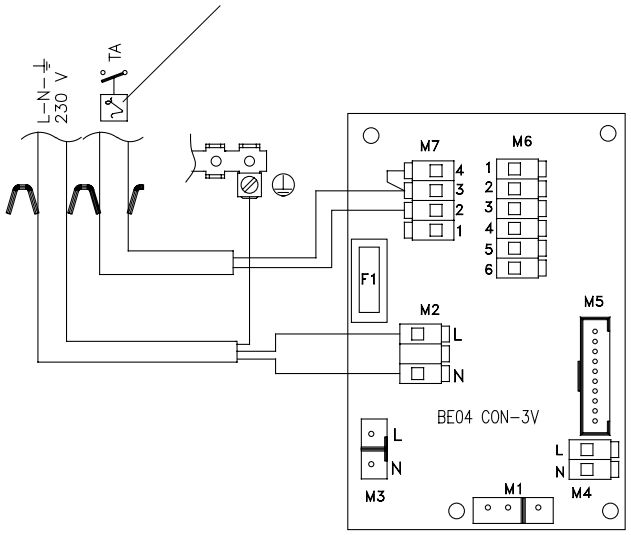

Fig. 34

FUNCTIONAL DIAGRAM

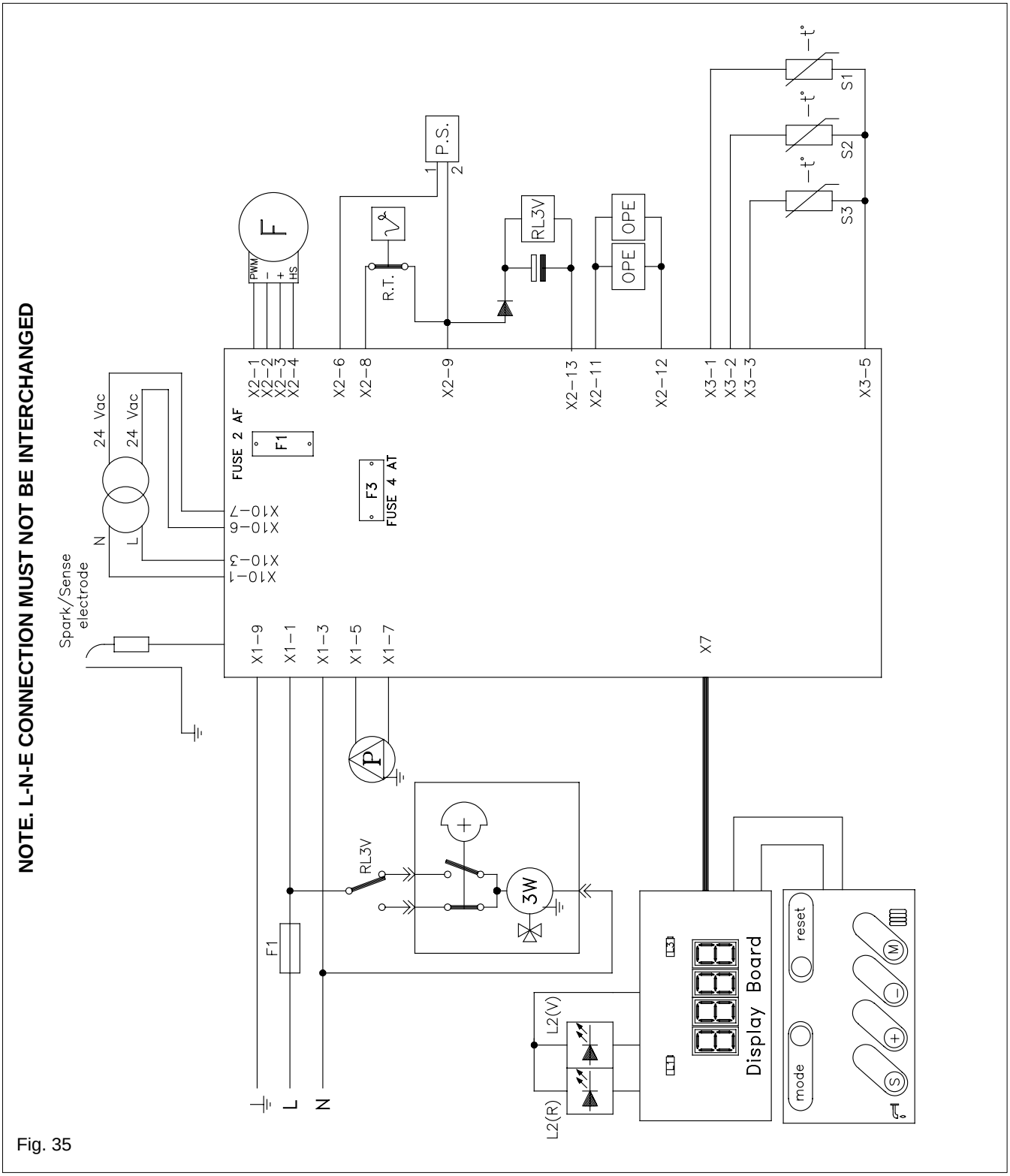

Fig. 35

Key

R.T.	Room thermostat
F	Fan
P	Pump
S1	Flow thermistor (NTC)
S2	Return thermistor (NTC)
S3	DHW thermistor (NTC)
BE04	Connection board
MCBA	Control board
L1	Led DHW mode
L2 (V)	Led OK
L2 (R)	Led alarm
L3	Led CH mode
F1	Fuse 2 AF
F3	Fuse 4 AT
S/S.E.	Spark/sense electrode
OPE	Gas valve solenoids
3V	3 way valve
RL3V	3 way relay
P.S.	Pressure switch (NC)

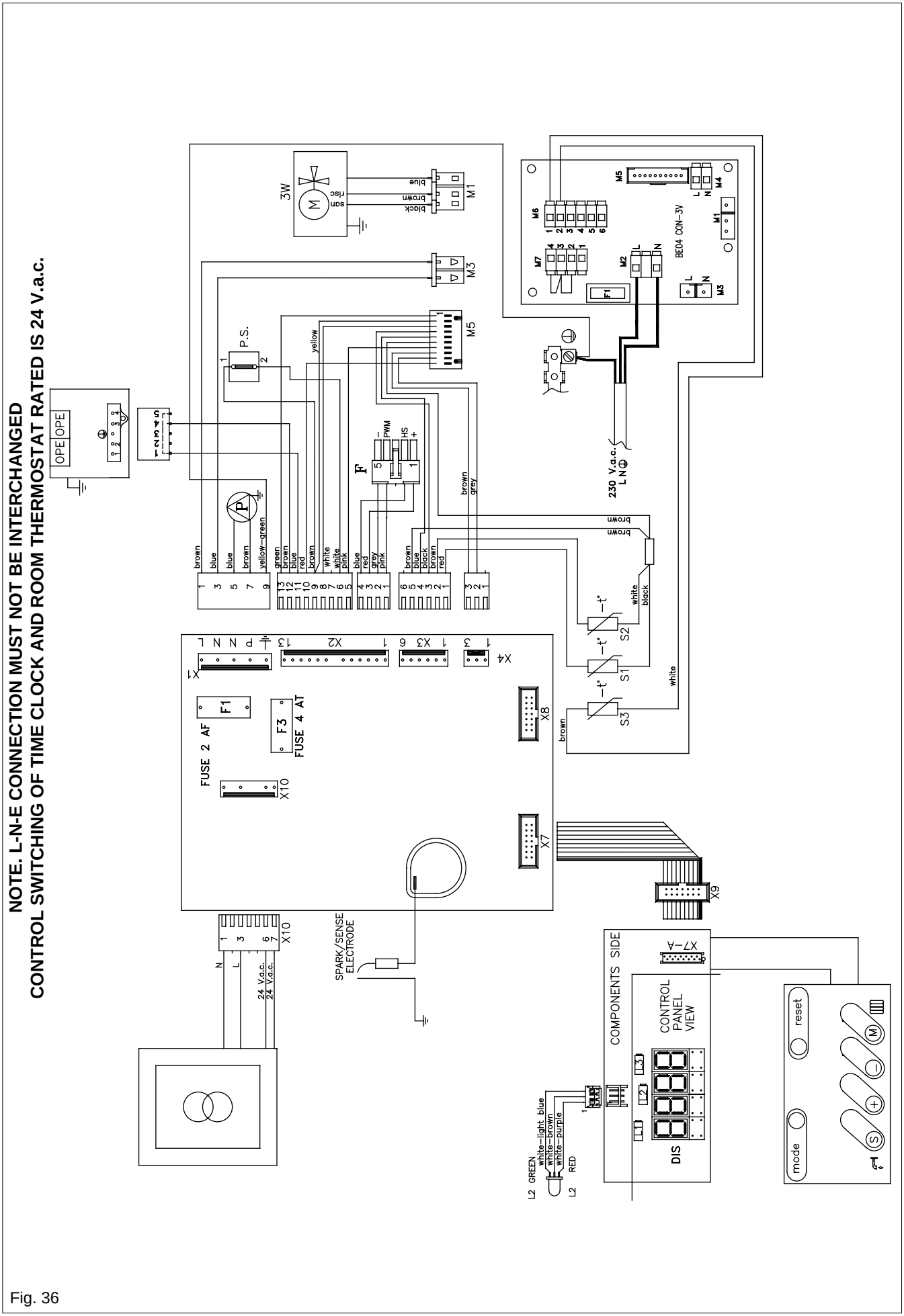
NOTE. L-N-E CONNECTION MUST NOT BE INTERCHANGED
CONTROL SWITCHING OF TIME CLOCK AND ROOM THERMOSTAT RATED IS 24 V.a.c.
3W
M1
M3
M5
M6
M7
M2
M4
F1
F3
P.S.
BE04 CON-3V
230 V.a.c.
L N
FUSE 2 AF
FUSE 4 AT
X1
X2
X3
X4
X7
X8
X9
X10
S1
S2
S3
SPARK/SENSE ELECTRODE
24 V.a.c.
COMPONENTS SIDE
CONTROL PANEL VIEW
DIS
mode
reset
L2 GREEN
white-light blue
white-brown
white-purple
L2 RED

Fig. 36

PCB	PLUG or CONNECTION	DESIGNATION
Input PCB	M1	3-port valve actuator
Input PCB	M2	Incoming 230V supply
Input PCB	M3	230V supply to main PCB
Input PCB	M4	230V clock supply
Input PCB	M5	Low voltage connector (to main PCB)
Input PCB	M6	Low voltage connector (NTCs)
Input PCB	M7	Low voltage connector (heat request)
Input PCB	F1	2AF fuse

PCB	PLUG or CONNECTION	DESIGNATION
Main PCB	X1	Incoming 230V supply & pump connection
Main PCB	X2	Fan connection, condense pressure switch connection, gas valve connection
Main PCB	X3	Sensor connections
Main PCB	X7	Display board connection
Main PCB	X8	Unused
Main PCB	X10	External transformer connection
Main PCB	F1	2AF fuse
Main PCB	F2	2AF fuse
Main PCB	F3	4AT fuse

PCB	PLUG or CONNECTION	DESIGNATION
Display PCB	X7A	Connection from main PCB
Display PCB	X9	Unused
Display PCB	3-pins connector	Status LED connection

PCB	PLUG or CONNECTION	DESIGNATION
Gas valve	OPE	Plug X2 on main PCB
Fan	F	Plug X2 on main PCB
Condense pressure switch	P.S.	Plug X2 on main PCB
Flow sensor	S1	Plug X3 on main PCB
Return sensor	S2	Plug X3 on main PCB
Pump	P	Plug X1 on main PCB
External transformer	⊖	Plug X10 on main PCB
Cold water inlet sensor	S3	Plug M4 on input PCB
External sensor (if fitted)	S4	Plug M4 on input PCB
Actuator	3W (M)	Plug M1 on input PCB
24V connection for time clock or room thermostat	R.T.	Plug M4 on input PCB (terminals 2&3)
Relay for actuator	RL3V	Input PCB
Status LED	L2	3-pins connector on display PCB

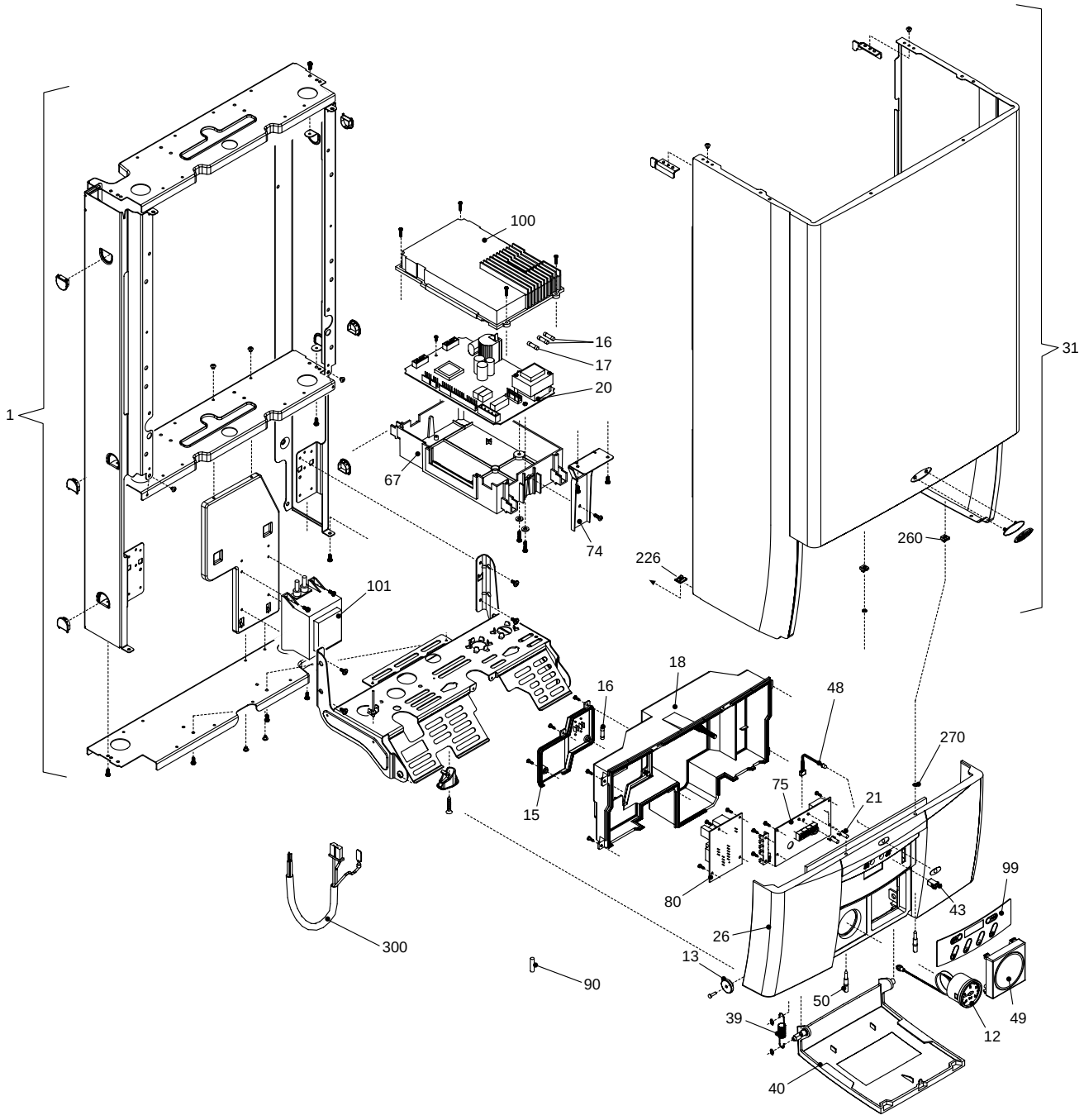

POS.	DESCRIPTION	CODE			
1	Frame	01005243	50	Pin	1867
12	Quick primer pressure gauge	1857	67	Printed circuit holding	10023476
13	Pin	10023044	74	Bracket	10023571
15	Cover	10023681	75	Display Printed Circuit Board	10023297
16	2 A 5X20 inline fuse	8968	80	Printed Circuit Board	10023299
17	3.15 A 5X20 inline fuse	8969	90	Fuse	3478
18	Printed Circuit Board cover	10021849	99	Membrane keypad	10023582
20	Printed Circuit Board	10023479	100	Cover	10023477
21	Led Light Guide	10023583	101	Wired transformer	10023478
26	Instrumental panel	10023347	226	Edge clip	5128
31	Case	10023589	260	Nut	5230
39	Spring	1862	270	O-ring	1869
40	Door panel	10023774	300	Flat cable	10023586
43	Push-push cover	1864			
48	Green-red led	1858			
49	Plastic bezel	8654			

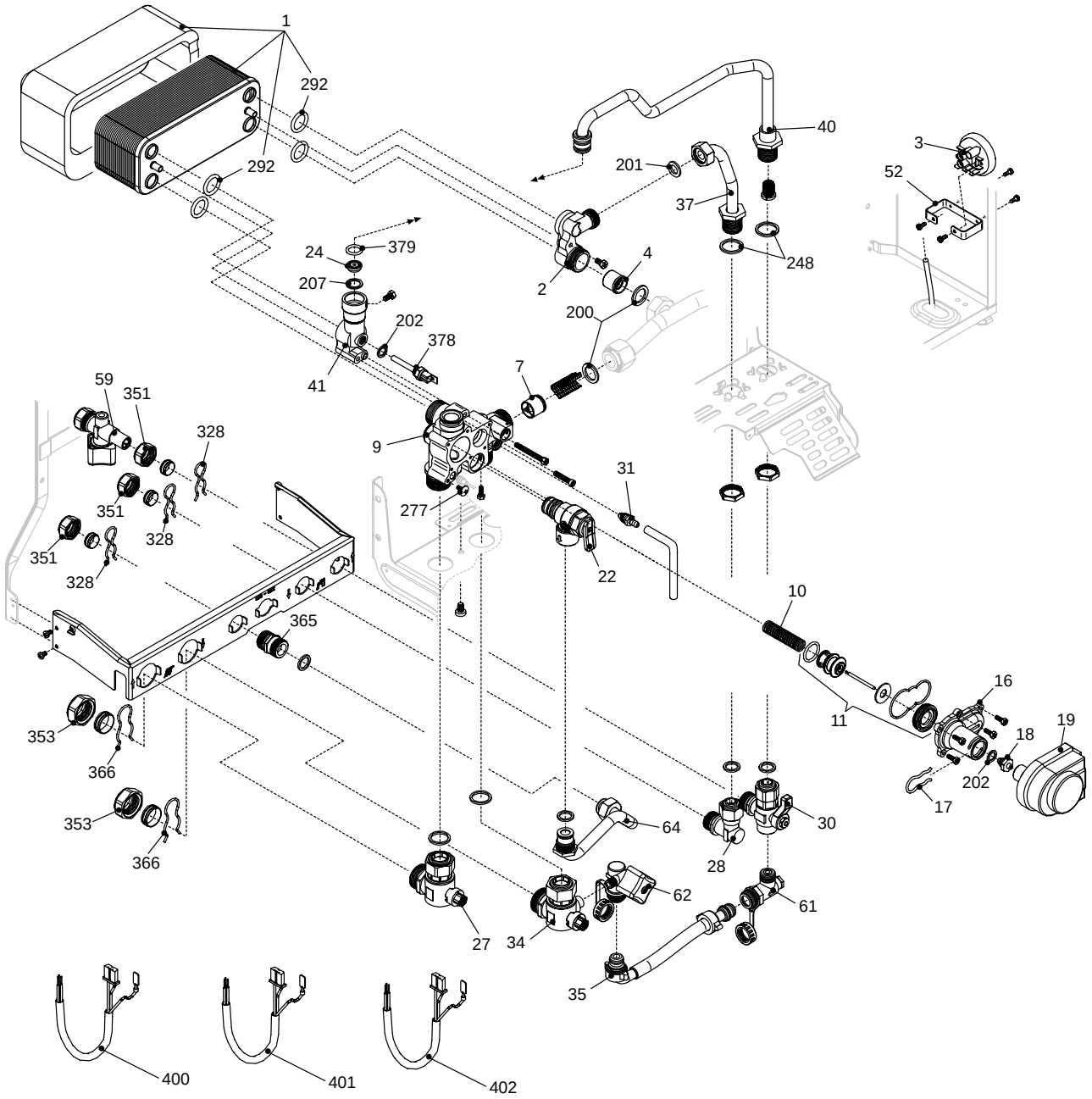

POS.	DESCRIPTION	CODE			
1	Domestic water heat exchanger	10023482	52	Bracket	10022671
2	Heat exchanger-pipe connection	8432	59	Water supply stop cock	1749
3	Pressure switch	10022556	61	Non return valve	10023569
4	Non return valve	2908	62	Filling cock	10023568
7	Heating by-pass valve	2047	64	Pipe	10023643
9	Heating distributor manifold	10020439	200	Washer	5023
10	3 port valve spring	6862	201	Washer	5026
11	3 way valve overhaul kit	01005127	202	Washer	5041
16	3 way valve cover	2904	207	Washer	5071
17	Motorised valve fixing fork wrench	2906	248	Washer	5208
18	Or union assembly bracket	6919	277	Screw	6903
19	Motorised valve	2905	292	O-ring	7999
22	Safety valve	1806	328	Clip	1890
24	Blue flow governor	8009	351	Brass nut	1823
27	Heating cock	1789	353	Ogive	1824
28	Connection	1790	365	Nipple	1793
30	Water supply stop cock	10023567	366	Clip	1820
31	Venting plugs kit	01005137	378	NTC sensor	8855
34	1/8” Heating deviation cock	10023566	379	O-ring	8959
35	Filling loop flexible pipe	10023570	400	Diverter valve cable	10023584
37	Pipe	1631	401	Hydraulic control cable	10024392
40	Pipe	10023577	402	NTC sensor cable	10023587
41	Connection	8952			

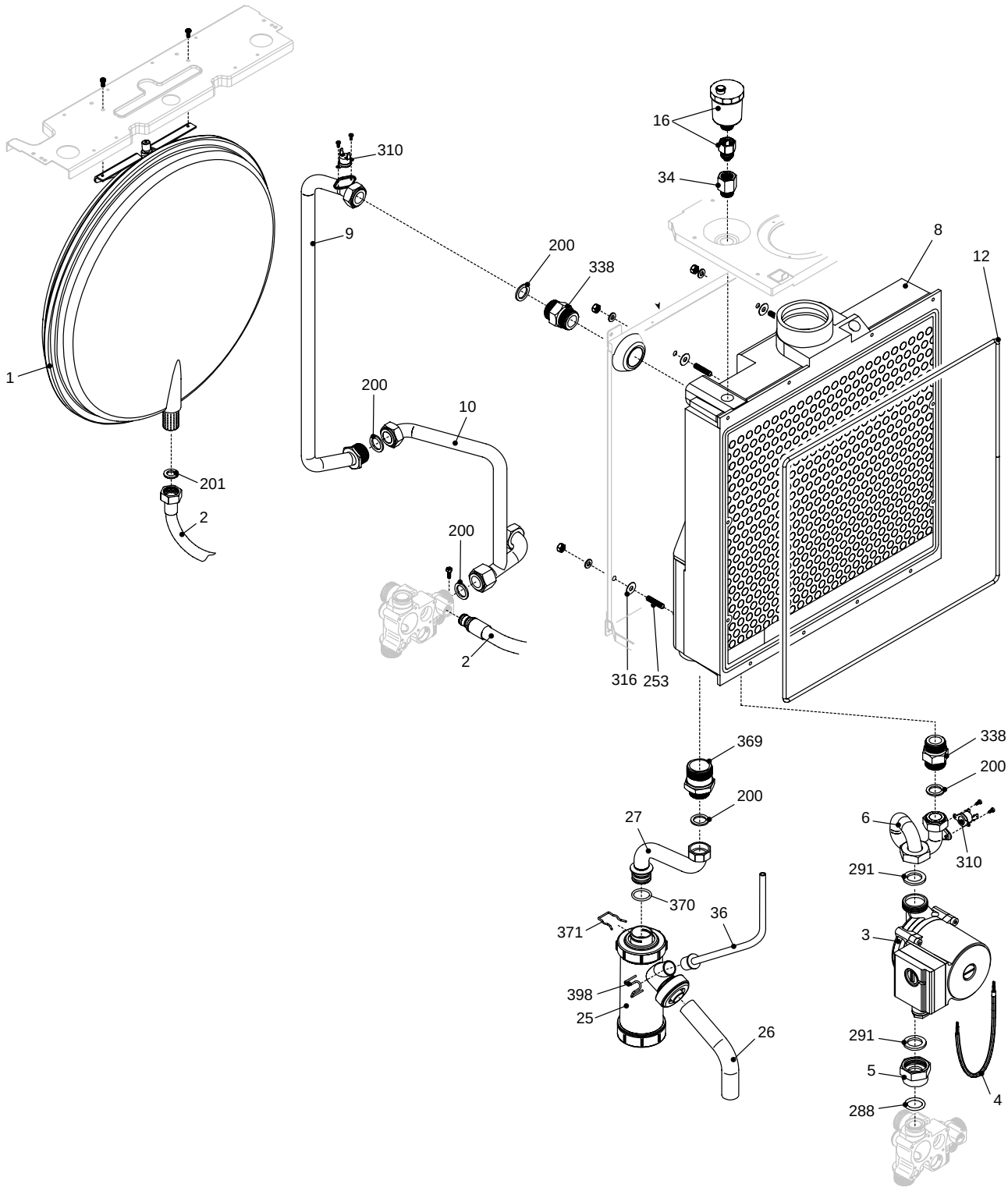

POS.	DESCRIPTION	CODE			
1	Expansion vessel	2573	36	Connection pipe	10023580
2	Flexible pipe	2164	200	Washer	5023
3	Pump	8876	201	Washer	5026
4	Pump cable	10023573	253	Headless screw	5216
5	Brass nut	10022444	288	O ring	6898
6	Pipe	10023574	289	Clip	2223
8	Heat exchanger	8884	291	Washer	R6897
9	Pipe	10023575	310	NTC sensor	1194
10	Pipe	10023576	316	Washer	1022
12	Washer	9287	338	Connection for dom. exp. vessel	8873
16	Air vent bottle + cock assembly	9806	369	Connection	10023493
25	Siphon	10024112	370	O-ring	10023533
26	Pipe	10023530	371	Clip	10023532
27	Pipe	10023579	398	Clip	10024336
34	Connection for air vent bottle	8911			

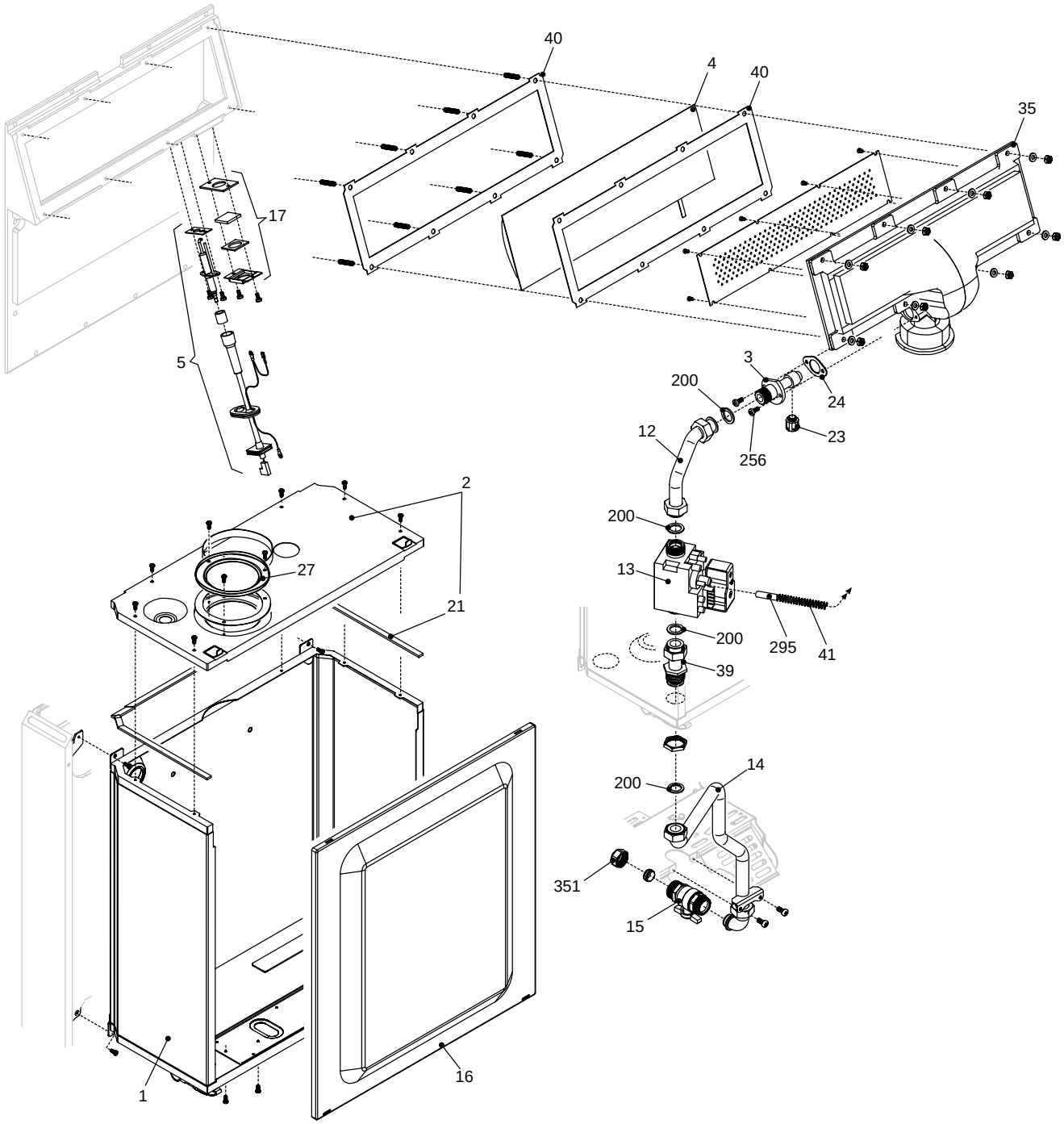

POS.	DESCRIPTION	CODE
1	Roomsealed chamber	10023486
2	Upper panel for air box	8881
3	Main burner jet support	1195
4	Main burner	1196
5	Spark electrode kit	01005242
12	Gas pipe	10022442
13	Gas valve	10022441
14	Pipe	10023578
15	Gas cock connection	1787
16	Front panel for air box	1035
17	Glass kit	01005234
21	Washer	5905
23	Main burner jet NG	8970
23	Main burner jet LPG	9295
24	Washer	9299
27	Air box hole cap	8084
35	Air conveyor	8886
39	Gas pipe	10022443
40	Washer	9285
41	Spring	9296
200	Washer	5023
256	Screw	5221
295	Silicone tube	1457
351	Brass nut	1823

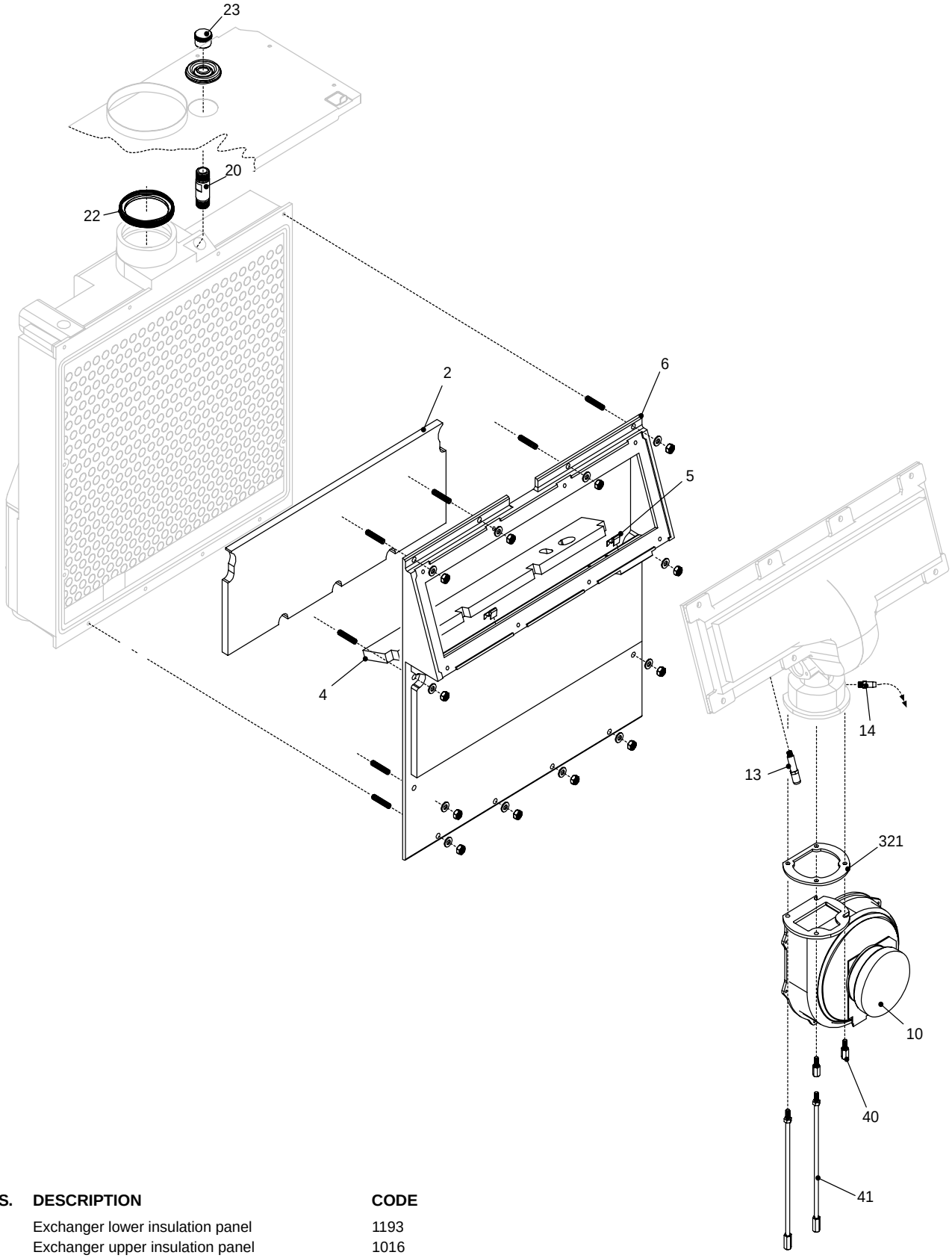

POS.	DESCRIPTION	CODE
2	Exchanger lower insulation panel	1193
4	Exchanger upper insulation panel	1016
5	Clip	10021115
6	Cover for heat exchanger	1033
10	Fan	10024230
13	Pressure connection	8915
14	Pressure connection	8916
20	Connection	8908
22	Washer	8912
23	Plug	8909
40	Screw	1006
41	Screw	9292
321	Fan gasket	8893

SECTION 10 L.P.G. INSTRUCTIONS

For details of converting boilers to LPG please refer to the instructions supplied with the relevant conversion kit.

10.1 TECHNICAL DATA

	Maximum	Minimum
Inlet pressure	37 mbar	37 mbar
Gas rate	4.09 l/per hr.	1.90 l/per hr.
Injector size	Single injector with six 2.3 mm holes	Single injector with six 2.3 mm holes
CO_2 level (cover off)	9,80%	9,80%
Soft-light	3.000RPM*	3.000RPM*
NOx	31 ppm	39 ppm
CO	59 ppm	27 ppm
CO_2	10% (cover on)	10% (cover on)

* set parameter P. 19 = 30

10.2 RELATED DOCUMENTS

BS 6798		**INSTALLATION OF BOILERS OF RATED INPUT NOT EXCEEDING 60 kW**
BS 5449	**PART 1**	**FORCED CIRCULATION HOT WATER SYSTEMS**
BS 5446		**INSTALLATION OF GAS HOT WATER SUPPLIERS FOR DOMESTIC PURPOSES**
BS 5440	**PART 1**	**FLUES**
BS 5482	**PART 1**	**DOMESTIC BUTANE & PROPANE GAS BURNERS IN PERMAMENT DWELLINGS**

10.3 GAS SUPPLY

The gas supply must be connected to the appliance by a competent LPG installer and must be of sufficient size to supply the appliance at its maximum output.

An existing supply must be checked to ensure that it is of adequate size to deal with the maximum rated input of this and any other appliances that it serves.

10.4 GAS SUPPLY INSTALLATION

The entire installation including the meter, must be purged and checked for gas soundness.

10.5 ADJUSTING THE GAS VALVE

The gas valve must be set-up or adjusted with the aid of a properly calibrated flue gas analyser.

Remove the appliance casing as detailed in section 4.10. Unclip and remove the air chamber cover. Set the flue gas analyser to read CO_2 and insert the probe into the flue analysis test point (fig.1). Using the procedure as detailed in section 7.4, enter the appliance engineer mode and set the power to minimum.

10.5.1 MINIMUM SETTING

With the boiler operating at minimum output the CO_2 reading should be 9.8% (+/- 0.2%). If the CO_2 reading is correct, proceed to 10.5.2. If the CO_2 reading is incorrect, the minimum gas pressure must be adjusted as follows:

- using a suitable screwdriver, very slowly turn the minimum adjustment screw (fig. 33) – clockwise to increase, counter clockwise to decrease – until the correct value is displayed on the CO_2 analyser (allow time for the analyser to stabilise).
- using the procedure as detailed in section 7.4, change the power momentarily from minimum to maximum, then back to minimum.
- check that the correct value is still being obtained. If not, repeat the above procedure.

10.5.2 MAXIMUM SETTING

The maximum setting must only be checked and/or adjusted after the correct minimum setting has been verified. Using the procedure as detailed in section 7.4, change the power from minimum to maximum.

With the boiler operating at maximum output the CO_2 reading should be 9.8% (+/- 0.2%). If the CO_2 reading is correct, press the reset button to exit the appliance engineer mode. If the CO_2 reading is incorrect, the maximum gas pressure must be adjusted as follows:

- using a suitable screwdriver, very slowly turn the maximum adjustment screw (fig. 33) – clockwise to increase, counter clockwise to decrease – until the correct value is displayed on the CO_2 analyser (allow time for the analyser to stabilise).
- using the procedure as detailed in section 7.4, change the power momentarily from maximum to minimum, then back to maximum.
- check that the correct value is still being obtained. If not, repeat the above procedure.
- press the reset button to exit the appliance engineer mode.

Remove the analyser test probe from the analysis test point and refit cap. Refit the air chamber cover. Refit appliance casing.

NOTE

You should ensure that all radiators or heat emitters are fully open during the above procedures. This will ensure that the fan speed (output) of the boiler is not compromised due to a high flow temperature.

Notes

Cod. 10023775 - 39/03 - Ed. 2

Vokèra

energizing home heating

Vokèra Ltd.
4th Floor, Catherine House, Boundary Way, Hemel Hempstead, Herts, HP2 7RP

Email: enquiries@vokera.co.uk Web: www.vokera.co.uk
Sales, Technical Advice, General Enquiries - Tel: 0870 333 0520 Fax: 01442 281403
After Sales Service - Tel: 0870 333 0220

Vokèra Ireland
West Court, Callan, Co Kilkenny
Tel: 05677 55057 Fax: 05677 55060

Vokèra Ltd. reserve the right to change the specifications without prior notice. Consumers' statutory rights are not affected.

A Riello Group Company

benchmark™ COLLECTIVE MARK

"Vokèra"
supports Benchmark