June 1990

IDEAL W 2000
RS 30N, RS 40N, RS 50N & RS 60N
Wall Mounted, Balanced Flue Gas Boilers
Installation & Servicing

CAUTION: To avoid the possibility of injury during the installation, servicing or cleaning of this appliance, care should be taken when handling edges of sheet steel components.

IMPORTANT; The appliances are for use with NATURAL GAS ONLY.

Ideal W 2000	G.C. Appliance No.
RS 30N	41 429 13
RS 40N	41 429 14
RS 50N	41 429 15
RS 60N	41 429 16

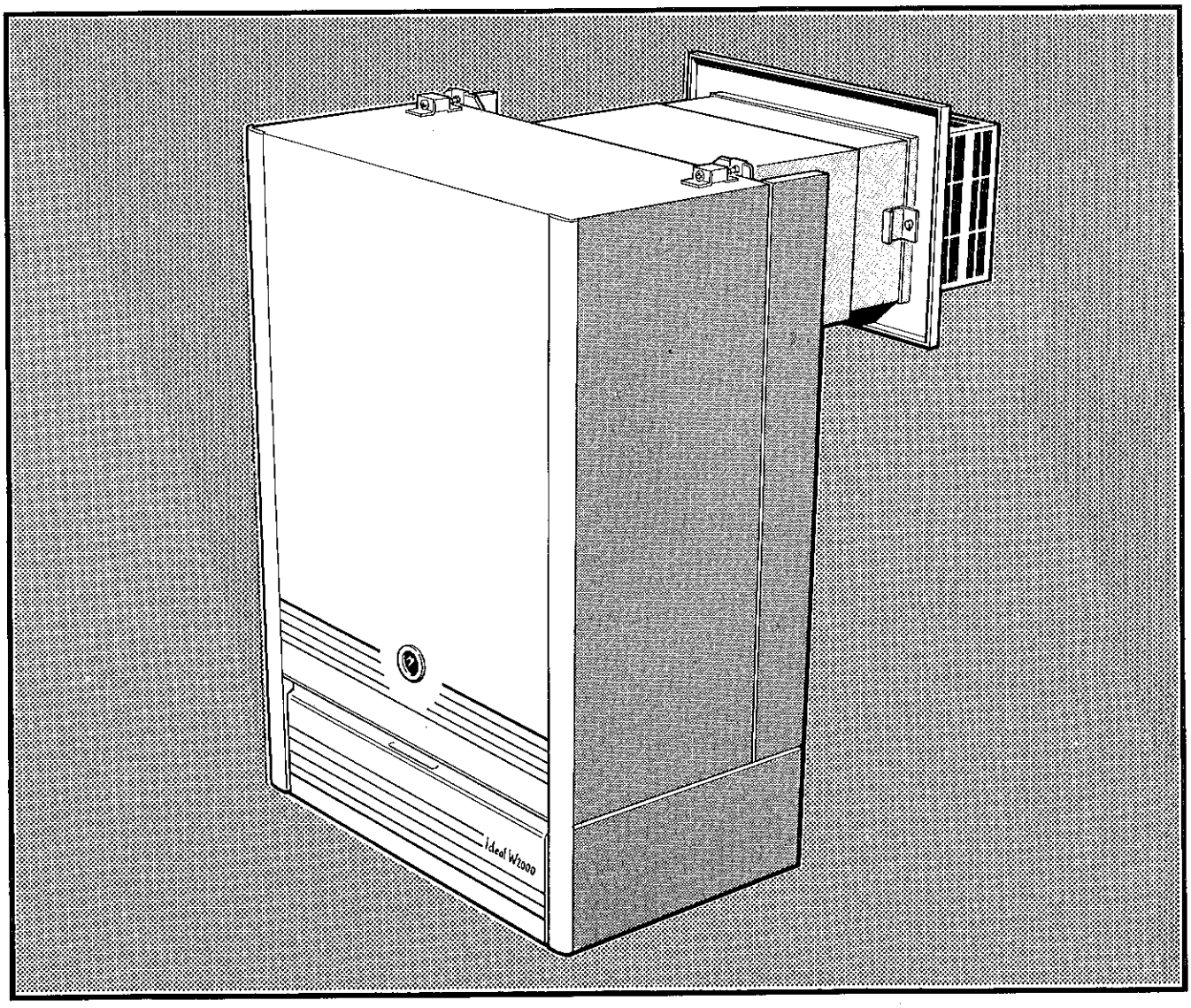

NOTE TO INSTALLER: LEAVE THESE INSTRUCTIONS ADJACENT TO THE GAS METER

Stelrad Ideal

Table 1- GENERAL DATA

Boiler Size			RS 30N	RS 40N	RS 50N	RS 60N
Main Burner Bar			AEROMATIC AC19/123256X		AEROMATIC AC19/123256	AEROMATIC AC 19/123257
Gas Control			HONEYWELL V4700E 1007, 240V			
Burner Injector			BRAY 103 950	BRAY 103 1150	BRAY 103 1450	BRAY 103 1800
Pilot Injector			SIT 0.977 113			
Gas Supply Connection		in. BSP	Rc 1/2 1/2			
Flow Connections		in. BSP	Rc 1 1			
Return Connections		in. BSP	Rc 1 1			
		in. BSP	Rc 3/4 3/4			
Maximum Static Water Head		m ft	30.5 100			
Minimum Static Water Head		m ft	0.45 1.5			
Electric Supply			240 V ~ 50 Hz			
External Fuse Rating			3 A			
Water Content		litre (gal.)	10.9 (2.4)			
Dry Weight		kg (lb)	70.0 (154)			
Maximum Installation Weight		kg (lb)	61.0 (134.0)			
Boiler Size	Height	mm (in.)	740 (29.1)			
	Width	mm (in.)	490 (19.3)			
	Depth	mm (in.)	312 (12.3)			

Table 2- PERFORMANCE DATA

Boiler Size			RS 30N	RS 40N	RS 50N	RS 60N
Boiler Input	MINIMUM	kW (Btu/h)	8.0 (27 300)	11.7 (40 000)	15.7 (53 600)	19.9 (68 000)
To obtain gas consumption (a) For l/s, divide heat input (kW) by C.V. of the gas (MJ/m³). (b) For Btu/h, divide heat input (Btu/h) by C.V. of the gas Btu/ft³).	Gas Consumption	l/s (ft³/h)	0.2 (26.3)	0.3 (38.5)	0.4 (51.6)	0.51 (65.4)
	MID	kW (Btu/h)	9.7 (33 100)	13.5 (46 000)	17.6 (60 000)	21.7 (73 900)
	Gas consumption	l/s (ft³/h)	0.25 (31.9)	0.35 (44.3)	0.45 (57.8)	0.56 (71.2)
Heat inputs are pre-set to the highest nominal rating	MAXIMUM	kW (Btu/h)	11.5 (39 000)	15.3 (52 000)	19.3 (65 700)	23.4 (80 000)
	Gas consumption	l/s (ft³/h)	0.29 (37.5)	0.39 (50.1)	0.5 (63.5)	0.6 (76.9)
Boiler Output	MINIMUM	kW (Btu/h)	5.8 (20 000)	8.8 (30 000)	11.7 (40 000)	14.7 (50 000)
	MID	kW (Btu/h)	7.3 (25 000)	10.3 (35 000)	13.2 (45 000)	16.1 (55 000)
	MAXIMUM	kW (Btu/h)	8.8 (30 000)	11.72 (40 000)	14.7 (50 000)	17.6 (60 000)
Burner Setting Pressure (Hot)	MINIMUM	mbar (in.w.g.)	5.7 (2.3)	8.6 (3.4)	9.9 (4.0)	10.7 (4.3)
	MID	mbar (in.w.g.)	8.7 (3.5)	11.6 (4.6)	11.9 (4.8)	12.7 (5.1)
	MAXIMUM	mbar (in.w.g.)	11.7 (4.7	14.7 (5.9)	14.0 (5.6)	14.7 (5.9)

INTRODUCTION

The **Ideal W 2000** RS 30N, RS 40N, RS 50N and RS 60N are wall mounted balanced flue, natural draught gas boilers.
They are range rated to provide central heating outputs of 5.8 kW (20 000 Btu/h) to 8.8 kW (30 000 Btu/h), 8.8 kW (30 000 Btu/h) to 11.7 kW (40 000 Btu/h), 11.7 kW (40 000 Btu/h) to 14.7 kW (50 000 Btu/h) and 14.7 kW (50 000 Btu/h) to 17.6 kW (60 000 Btu/h).

The boiler casing is of white enamelled mild steel as is the controls pod which contains a drop down door and removable base.

The boiler thermostat is located behind the controls access door, in the box mounted adjacent to the gas valve.

Programmer and pump kits, which fit neatly within the casing, are available as optional extras.

Separate fitting instructions are included with these kits.

The boilers are suitable, as standard, for connection to open vented systems ONLY. An optional overheat thermostat kit is available to allow the boiler to be used on sealed water systems.

THE OPTIONAL PUMP KIT CANNOT BE USED IN CONJUNCTION WITH THE OVERHEAT THERMOSTAT KIT, AN ALTERNATIVE PUMP ARRANGEMENT MUST BE INSTALLED.

The boiler is suitable for connection to pumped, open vented central heating systems; pumped central heating combined with pumped, or gravity, indirect domestic hot water systems; gravity or pumped, indirect domestic hot water supply systems.
See Frame 3 for details of correct boiler tappings to use.

RS 30N,RS 40N & 50N boilers are suitable for the following wall thicknesses.
114 mm (4 1/2 in) to 191 mm (7 1/2 in),
229 mm (9 in) to 305 mm (12 in),
318 mm (12 1/2 in) to 394 mm (15 1/2 in)
and 406 mm (16 in) to 584 mm (23 in).

RS 60N boilers are suitable for the following wall thicknesses.
114 mm (4 1/2 in) to 191 mm (7 1/2 in),
229 mm (9 in) to 305 mm (12 in),
and 318 mm (12 1/2 in) to 394 mm (15 1/2 in)

Wall thicknesses outside of these sizes cannot be accommodated.

Gas Safety (Installation and Use) Regulations, 1984

It is law that all gas appliances are installed by competent persons (e.g. CORGI identified by ❀) in accordance with the above Regulations. Failure to install appliances correctly could lead to prosecution. It is in your own interest and that of safety, to ensure the law is complied with.

The installation of the boiler MUST also be in accordance with the latest I.E.E. Wiring Regulation, the Local Building Regulations, the by-laws of the Local Water Authority, the Building Regulations and the Building Standards (Scotland) and any relevant requirements of the Local Authority.

Detailed recommendations are contained in the following British Standard Codes of Practice.

BS.6891	Low pressure installation pipes
BS.6798	Installation of gas fired hot water boilers of rated input not exceeding 60 kW
BS.5449:1	Forced circulation hot water systems. (Smallbore and Microbore Domestic Central Heating Systems)
BS.5546	Installation of gas hot water supplies for domestic purposes (2nd Family Gases)
BS.5440:1	Flues (for gas appliances of rated input not exceeding 60 kW
BS.5440:2	Air supply (for gas appliances of rated input not exceeding 60 kW)

Manufacturer's notes must NOT be taken, in any way, as over-riding statutory obligations.

IMPORTANT: These appliances are certificated by the British Standards Institution for safety and performance. It is, therefore, important that no external control devices, e.g. flue dampers, economisers etc - are directly connected to these appliances- unless covered by these 'Installation and Servicing' instructions or otherwise recommended by Stelrad Group Ltd, in writing. If in doubt please enquire.
Any direct reconnection of a control device not approved by Stelrad Group Ltd., could invalidate the B.S.I. Certification and the normal appliance warranty and could also infringe the Gas Safety Regulations and the above Regulations.

LOCATION OF BOILER

The boiler MUST be installed on a flat and vertical external wall, capable of adequately supporting the weight of the boiler and any ancillary equipment.
The boiler may be fitted on a combustible wall and insulation between the wall and the boiler is not necessary- unless required by the Local Authority. THE BOILER IS NOT SUITABLE FOR EXTERNAL INSTALLATION.

IMPORTANT NOTICE: If the boiler is to be fitted in a timber framed building it should be fitted in accordance with the British Gas publication 'Guide for Gas Installations in Timber Frame Housing', Reference DM2. If in doubt advice must be sought from the Local Gas Region of British Gas.

The boiler may be installed in any room or internal space, although particular attention is drawn to the requirements of the current I.E.E. Wiring regulations and, in Scotland, the electrical provisions of the Building Regulations applicable in Scotland, with respect to the installation of the boiler in a room or internal space containing a bath or shower.
Where a room-sealed appliance is installed in a room containing a bath or shower then the appliance and any electrical switch or appliance control, utilising mains electricity should be so situated that it cannot be touched by a person using the bath or shower.
Where installation will be in an unusual location, special procedures may be necessary and BS. 6798 gives detailed guidance on this aspect.
A compartment used to enclose the boiler MUST be designed and constructed specially for this purpose. An existing cupboard, or compartment, may be used provided it is modified for the purpose. Details of essential features of cupboards/ compartment design, including airing cupboard installation are given in BS. 6798.

In siting the boiler, the following limitations MUST be observed.

1. The position selected for installation MUST allow adequate space for servicing in front of the boiler and for air circulation around the boiler. For minimum clearances required for safety and subsequent service, see Wall Mounting Template, Frame 6 & Frame 7. In addition sufficient space may be required to allow lifting access on to the wall mounting plate.
2. This position MUST also permit the provision of a satisfactory balanced flue termination.

GAS SUPPLY

The Local Gas Region should be consulted, at the installation planning stage, in order to establish the availability of an adequate supply of gas. An existing service pipe must NOT be used without prior consultation with the Local Gas Region.
A gas meter can only be connected by the Local Gas Region, or by a Local Region Contractor.
An existing meter should be checked, preferably by the Gas Region to ensure the meter is adequate to deal with the rate of gas supply required.
Installation pipes MUST be fitted in accordance with BS.6891 Pipework from the meter to the boiler MUST be of an adequate size.

Do NOT use pipes of smaller size than the boiler inlet gas connection.
The complete installation MUST be tested for gas soundness and purged as described in the above Code.

FLUEING

Detailed recommendations for fluing are given in BS.5440:1.

The following notes are intended for general guidance:

1. The boiler MUST be installed so that the terminal is exposed to the external air.
2. It is important that the position of the terminal allows free passage of air across it at all times.
3. Minimum acceptable spacings from the terminal to obstructions & vetilation openings are specified in Table 3.
4. Where the lowest part of the terminal is fitted less than 2m (6.6 ft) above a balcony ground, or above a flat roof, to which people have access.
   The terminal MUST be protected by a purpose designed guard.
   Terminal guards are available from:
   Quinnel, Barret & Quinnel Limited, 884 Old Kent Road, London SE 15; Model P6, or
   Tower Flue Components Limited, Vale Rise, Tonbridge, KENT TN. 9: Model C
   Ensure that the guard is fitted centrally.

Table 3

Terminal Position	Minimum Spacing
1. Directly below an openable window, air vent or any other ventilation opening	300 mm (12 in)
2. Below guttering, drain pipes or soil pipes	300 mm (12 in)
3. Below eaves	300 mm (12 in)
4. Below balconies or a car port roof	600 mm (24 in)
5. From vertical drain pipes or soil pipes	75 mm (3 in)
6. From internal or external corners	600 mm (24 in)
7. Above adjacent ground, roof or balcony level	300 mm (12 in)
8. From a surface facing the terminal	600 mm (24 in)
9. From a terminal facing the terminal	600 mm (24 in)
10. From an opening in a car port (eg. door window) into dwelling	1200 mm (48 in)
11. Vertically from a terminal on the same wall	1500 mm (60 in)
12. Horizontally from a terminal on the wall	300 mm (12 in)

5. Where the terminal is fitted within 850 mm (34 in) of a plastic or painted gutter, or 450 mm (18 in) of painted eaves, an aluminium shield at least 750 mm (30 in) long should be fitted to the underside of the gutter or painted surface.
6. The air inlet/products outlet duct and the terminal of the boiler MUST be NOT closer than 25 mm (1 in) to combustible material.
   Detailed recommendations on protection of combustible material are given in BS.5440:1 1978, sub-clause 20:1

   IMPORTANT: It is absolutely ESSENTIAL to ensure, in practice, that products of combustion, discharging from the terminal cannot re-enter the building, or any other adjacent building, through ventilators, windows, doors, other sources of natural air infiltration or forced ventilation/air conditioning.
   If this should occur, the appliance MUST be turned OFF immediately and the Local Gas Region consulted.

TERMINAL

The terminal assembly of the balanced flue can be adapted to accommodate various wall thicknesses- refer Packaging.

AIR SUPPLY

Detailed recommendations for air supply are given in BS.5440:2.

The following notes are intended for general guidance:

1. It is NOT necessary to have a purpose provided air vent in the room or internal space in which the boiler is installed.
2. If the boiler is to be installed in a cupboard or compartment, permanent air vents are required (for cooling purposes) in the cupboard or compartment, at both high and low levels. The air vents MUST either communicate with a room/ internal space, or be direct to outside air. The minimum effective areas of the permanent air vents, required in the cupboard/compartment, are specified below and are related to the maximum rated heat input of the boiler.
   Note: Both air vents MUST communicate with the same room, or internal space, or MUST both be on the same wall to outside air.

Table 4 - RS 30N

Position of air vent	Air from room/ internal space	Air direct from outside
HIGH LEVEL cm² (in.²)	100 (16)	50 (8)
LOW LEVEL cm² (in.²)	100 (16)	50 (8)

Table 5 - RS 40N

Position of air vent	Air from room/ internal space	Air direct from outside
HIGH LEVEL cm² (in.²)	132 (21)	66 (11)
LOW LEVEL cm² (in.²)	132 (21)	66 (11)

Table 6 - RS 50N

Position of air vent	Air from room/ internal space	Air direct from outside
HIGH LEVEL cm² (in.²)	165 (26)	88 (13)
LOW LEVEL cm² (in.²)	165 (26)	88 (13)

Table 7 - RS 60N

Position of air vent	Air from room/ internal space	Air direct from outside
HIGH LEVEL cm² (in.²)	198 (31)	99 (16)
LOW LEVEL cm² (in.²)	198 (31)	99 (16)

WATER CIRCULATION SYSTEM

The boiler must NOT be used for direct hot water supply.

For the types of system and correct piping procedure- see Introduction and Frame 3.

Note: All water connections MUST be made to the boiler REAR tappings.

The central heating system should be in accordance with BS. 6798 and in addition, for Smallbore and Microbore systems - BS.5449:1

The domestic hot water system, if applicable, should be in accordance with the relevant recommendations of BS.5546.
Copper tubing, to BS.2871:1 is recommended for water carrying pipework.

The hot water storage cylinder MUST be of the indirect type and should preferably be manufactured of copper.
Single-feed indirect cylinders are not recommended, and MUST NOT be used on sealed systems.

The appliances are NOT suitable for gravity central heating systems with , or without, addittional gravity domestic hot water supply, nor are they suitable for the provision of gravity domestic hot water requirements above a 181.8 litre (40 gal) tank capacity, depending on the model.

The hot water cylinder and ancillary pipework, not forming part of the useful heating surface, should be lagged to prevent heat loss and any possible freezing- particularly where pipes run through roof spaces and ventilated under floor spaces.

The boiler MUST be vented. If venting cannot be done via a flow connection, a separate vent MUST be fitted by the Installer. This does NOT mean that more than one open vent is required. Other parts of the system, which may become unavoidably air locked, can be automatically vented.

Draining taps MUST be located in accessible positions, which permit the draining of the whole system, including the boiler and hot water storage vessel.
Draining taps should be, at least 1/2 in BSP nominal size and be in accordance with BS.2879.

The hydraulic resistances of the boilers, at MAXIMUM OUTPUT, with an 11°C (20°F) temperature differential, are shown in Table 8.

Table 8- WATER FLOW RATE AND PRESSURE LOSS

Boiler Size		RS 30N	RS 40N	RS 50N	RS 60N
Boiler Output	kW	8.8	11.7	14.7	17.6
	Btu/h	30 000	40 000	50 000	60 000
Water Flow Rate	l/min	11.4	15.2	19	22.8
	gal/h	150	200	250	300
Pressure Loss	mbar	15	27	39	51
	in.w.g.	6.0	10.8	15.6	20.5

ELECTRICITY SUPPLY

Wiring external to the appliance MUST be in accordance with the current I.E.E. Wiring regulations and any Local Regulations which apply.

The boiler is supplied for 240 V ~ 50 Hz

Single Phase

Fuse Rating is 3A

The method of connection to the mains electricity supply MUST facilitate complete electrical isolation of the boiler, preferably by the use of a fused, unswitched three pin plug and a shuttered socket-outlet, both complying with the requirements of BS.1363.

Alternatively, a fused double-pole switch, having at least a 3 mm (1/8 in) contact separation in both poles and servicing only the boiler, may be used.

The point of connection to the mains should be readily accessible and adjacent to the boiler, except that, for bathroom installations, the point of connection to the mains MUST be situated outside the bathroom.

NOTE: Where a room sealed appliance is installed in a room containing a bath or shower, the appliance, any electrical switch or appliance control utilising mains electricity should be so situated that it cannot be touched by a person using the bath or shower.

1 UNPACKING

The boiler is supplied fully assembled in one pack, 'A', together with one of four packs, B, B1, C & D, containing the flue terminal appropriate to the wall thickness. Optional extras, if ordered (Pump Kit, Programmer Kit and Sealed System Kit), are supplied in seperate boxes.

PACK 'A' CONTENTS

Complete Boiler,
Wall Mounting Template,
Wall Mounting Plate,
Installation & Servicing Instructions,
User Instructions,
Hardware Pack,

HARDWARE PACK CONTENTS

Distributor tube, 1 off
Cable Clips, 2 off
1 in. BSP recessed plugs, 2 off
8 mm × 50 mm coach screws, 3 off
50 mm × No 10 wood screw, 1 off
Wall plugs (TP3 blue), 3 off
Wall plug (TP28 - brown), 1 off
Data plate indication arrow, 1 off
Square bar (adaptor for recessed plugs)
No. 6 × 10 Self Tapping Screws - 4 Off

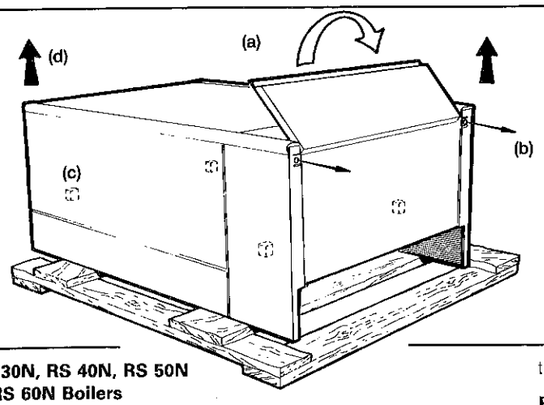

1. Unpack the boiler
2. Remove the casing as follows and place to one side to avoid damage.
   (a) Open controls pod door, unhinge & remove.
   (b) Undo the two screws retaining the casing bottom panel & pull the panel forwards to remove.
   (c) Undo the four screws retaining the casing to the back panel.
   (d) Remove the casing in the direction of the arrow.
3. Unpack the flue terminal.
4. Remove the boiler from its packing base.

RS 30N, RS 40N, RS 50N & RS 60N Boilers

PACK B: Contains a balanced flue terminal suitable for wall thicknesses from 229 mm (9 in) to 305 mm (12 in).

PACK B1: Contains a balanced flue terminal suitable for wall thicknesses from 318 mm (12 1/2 in) to 394 mm (15 1/2 in).

PACK C; Contains a balanced flue terminal suitable for wall thicknesses from 114 mm (4 1/2 in) to 191 mm (7 1/2 in).

RS 30N, RS 40N & RS 50N Boilers only

PACK D: Contains extension ducts which when used in conjunction with PACK B, are suitable for wall thicknesses from 406 mm (16 in) to 584 mm (23 in). **Note:** Wall thicknesses outside those specified cannot be accommodated. An overlap of at least 50 mm. at any duct joints must be allowed.

2 BOILER ASSEMBLY- Exploded view

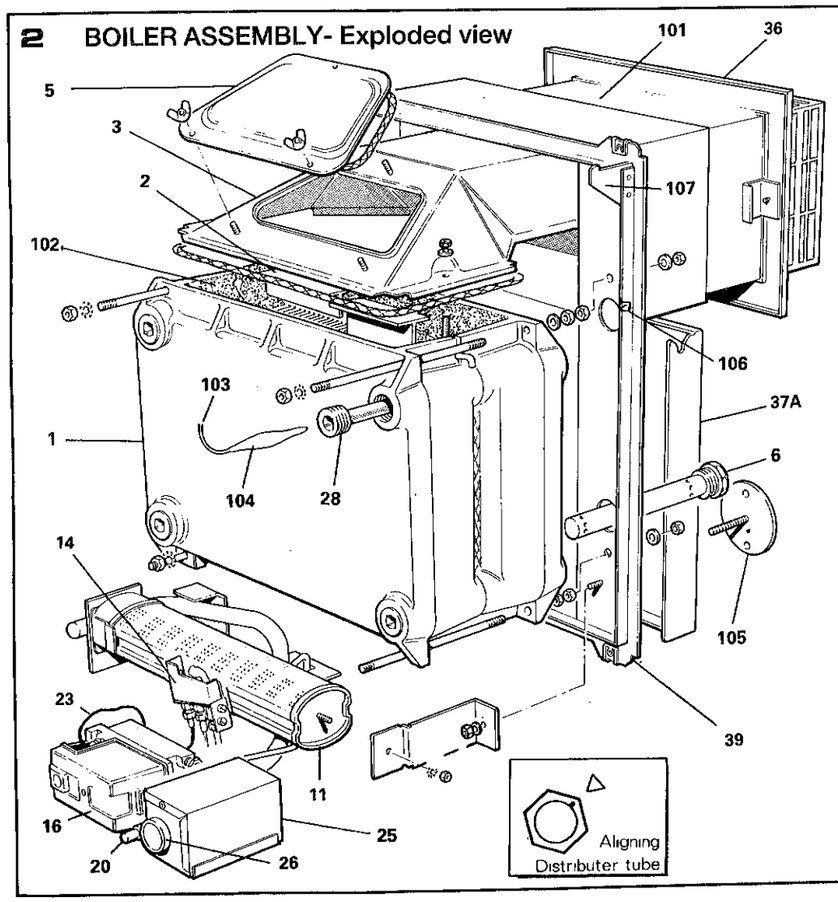

LEGEND

1	Heat exchanger
2	Flueway baffles
3	Collector hood
5	Flue cleanout cover
6	Distributor tube (left or right, one side only)
11	Main burner
14	Pilot burner assembly
16	Gas valve
20	Piezo unit
23	Thermocouple lead
25	Control box
26	Boiler thermostat
28	Boiler thermostat pocket (left or right)
36	Balanced flue terminal
37A	Wall mounting plate
39	Back panel
101	Ducts
102	Heat exchanger flue
103	Thermostat capillary
104	Boiler thermostat phial
105	Jacking plate
106	Thermostat capillary clips
107	Casing support clips

3 BOILER WATER CONNECTIONS (Open vented systems)

1. Use approved jointing compound for all water connections.
2. This appliance is NOT suitable for use in a direct hot water system.
3. If the boiler is to be used on a sealed system, an optional extra kit is available and must be installed in accordance with the instructions supplied with the kit.

All water connections must be made to the REAR tappings. The distributor tube MUST be fitted to the HEATING return. Ensure that the index mark on the tube is aligned with the arrow on the boiler back panel, refer to Frame 2. The thermostat pocket MUST be fitted to the FRONT top tapping at the SAME SIDE of the boiler as the distributor tube. Plug all tappings not used with recessed plugs provided.

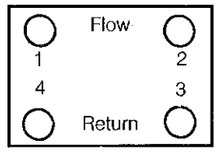

SCHEMATIC REAR VIEW OF BOILER, showing boiler flow & return tappings.

Note: *The boiler as supplied has been plugged for the return connection into tapping 4. These plugs may be repositioned if other options are required.*

SYSTEM REQUIRED	TAPPINGS TO BE USED
Fully Pumped (Pump kit fitted)	Flow 1 Return 3 or 4
Fully Pumped (External Pump)	Flow 1 or 2 Return 3 or 4
Pumped CH (Pump Kit Fitted) & Gravity HW	Flow 1 Return 4 Flow 2: Return 3
Pumped CH (External Pump) & Gravity HW	Flow 1 or 2 Return 3 or 4 Flow 1: Return 4 Flow 2: Return 3
Pumped CH Only (Pump Kit Fitted)	Flow 1 Return 3 or 4
Pumped CH Only (External Pump)	Flow 1 or 2 Return 3 or 4
Gravity HW Only	Flow 1: Return 4 or Flow 2: Return 3

For Sealed System applications (fully Pump) refer to the Overheat Thermostat Kit Instructions.

4 MINIMUM REQUIREMENTS- (Fully pumped, open vented systems)

1. Open vent & cold feed connections are made to the boiler flow/ return tappings as shown.
2. The boiler is assumed to be the highest point of the circulating system.
3. The circulation pump is positioned on the FLOW. The vertical distance, between the pump & the feed/expansion tank, complies with the Pump Manufacturer's minimum requirements - to avoid cavitation. Should these conditions not apply, either lower the pump position, or raise the feed/expansion tank above the minimum requirements of Stelrad Group Ltd,.
4. The water velocity through the boiler flow/return pipes is assumed to be below 1 m/s (3 ft/s), whilst the pump flow rate is set to provide a temperature difference of 11°C (20°F) across the boiler flow/ return, at design input.
5. This information is intended as a GUIDE ONLY and cannot take into account instantaneous changes in head caused by the operation of motorised valves, pump etc. Due allowance MUST be made if surging is liable to occur.

   If in doubt contact Stelrad Group Ltd.

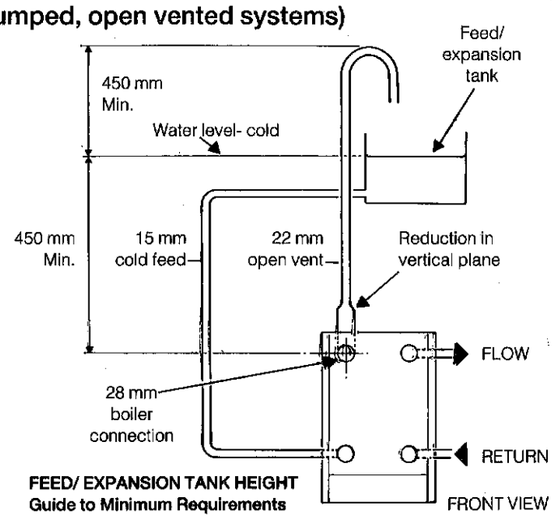

FEED/ EXPANSION TANK HEIGHT Guide to Minimum Requirements

5 REQUIREMENTS FOR CORRECT GRAVITY HOT WATER PERFORMANCE

Note: Gravity horizontal pipes should be ABOVE ceiling level and as SHORT as possible. A MINIMUM inclination of 25 mm per 3m run (1 in per 10 ft) is required to avoid air locks. If these conditions cannot be met, pumped primaries MUST be used.

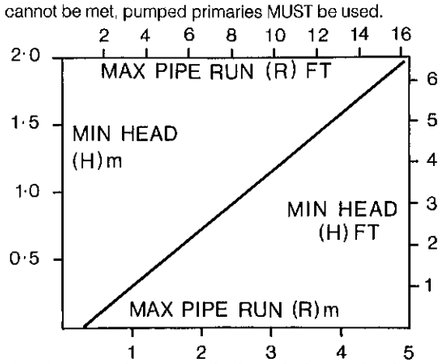

The above graph assumes 8 elbows in the gravity circuit. For each elbow in excess of 8 (R) must be reduced by 300 mm (12in) or (H) increased by 100 mm (4 in).

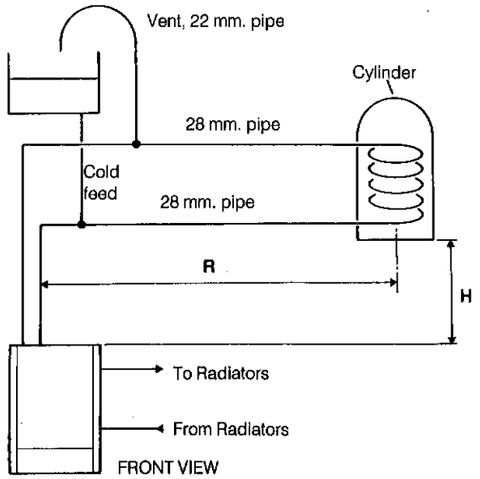

6 BOILER DIMENSIONS/ SERVICES

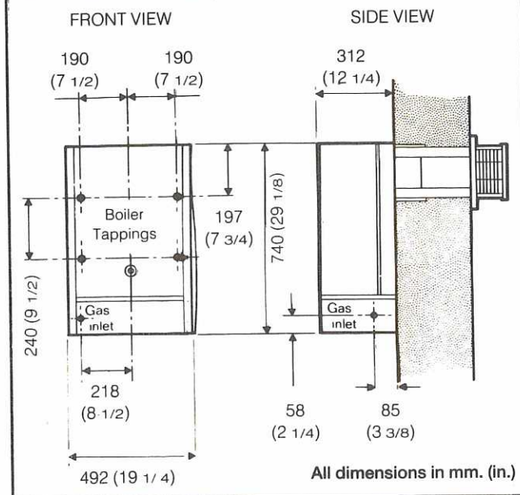

All dimensions in mm. (in.)

7 BOILER CLEARANCES & TERMINAL OPENING

All dimensions in mm. (in.)

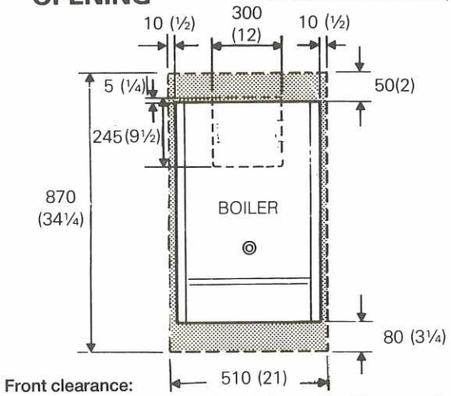

Front clearance:
450 (17¾), from the front of the boiler casing. These are the minimum clearances needed to allow access to service the boiler, but additional space may be needed for Installation, depending on site conditions.

8 WALL MONTING TEMPLATE

1. Tape the template to the wall in the selected position. Ensure squareness by use of a plumbline- as shown.
2. Mark out the position of the 3 wallplate screws, choosing 1 from each group of 3 holes. Also the position of the hole for the duct & the jacking plate screw.

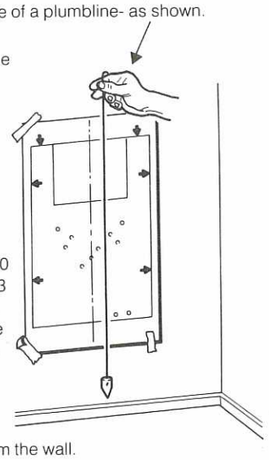

3. Drill the three holes (No 20 or 10 mm) and insert the 3 TP-3 plastic plugs (Blue). Also drill the jacking plate screw hole and insert the plastic plug (Brown).
4. Remove the template from the wall.

9 PREPARING THE WALL

1. Cut the appropriate hole in the wall for insertion of the terminal assembly. **Note;** the terminal must not come into contact with a combustible material, such as that used in the non standard construction of timber framework & plasterboard etc.
2. If the optional pump kit is to be used, mark and drill the two holes with a No.20 (10 mm) masonry drill-as shown on the pump kit template and insert the two TP3 plastic plugs.

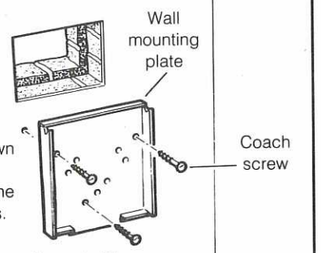

3. Fix the mounting plate to the wall with the 3 (8 mm × 50 mm) coach screws provided.
4. If applicable, screw the pump mounting bracket to the wall using the screws provided in the pump kit.

10 PREPARING THE BOILER

1. Fit distributor tube to the chosen pumped heating return connection. Align index mark on tube with arrow on the back panel, refer to Frame 2. **Note:** If the optional programmer kit is to be fitted, do so at this stage, up to point of fitting boiler on the wall, refer to separate fitting instructions supplied with kit.
2. The thermostat pocket is pre-fitted to the upper R.H. side tapping, but should be re-positioned if required such that it is always in an upper tapping on the same side as the distributor tube.

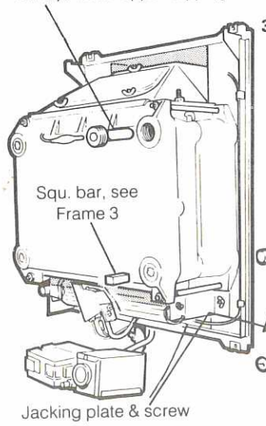

3. Fit the stub connections for the heating flow and return, and gravity flow and return, if required. If the side clearance is limited, ensure the stub connections are continued upwards or downwards to clear the top or bottom of the boiler casing. To fit the boiler casing the gas and water connections MUST run within the space enclosed.
4. Plug spare tappings with the recessed plugs, provided.
5. If the boiler is to be fi'' d on a sealed system- refer to the overheat thermostat kit instructions (position of thermostat phial).
6. Route and clip thermostat capillary and phial (shown in Frame 3, Servicing).

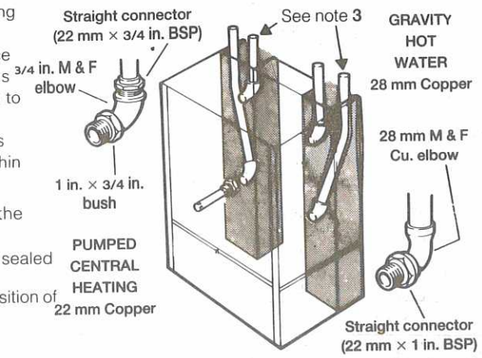

Using the above fittings for gravity H.W. & pumped C.H. ensures the correct relationship between the pipes & the wall.

11 MOUNTING THE BOILER & CHECKING THE FLUE ALIGNMENT

1. Lift the boiler onto the wall mounting plate, entering the projecting flue duct into the opening cut in the wall, and lowering the two suspension studs into the slotted bearers at the top of the wall mounting plate side angles. Adjust the flue to it's horizontal position by tilting the boiler forward at the bottom and then turning the jacking plate. Release & check alignment with a spirit level. Secure the jacking plate with a No 10 × 50 wood screw.

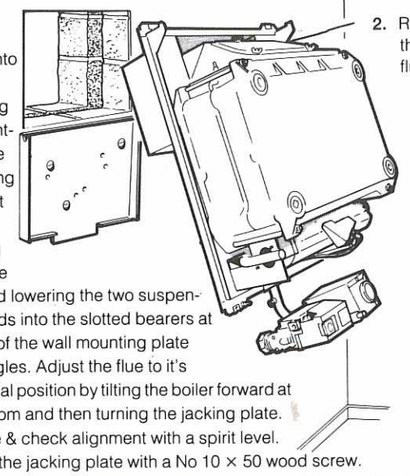

2. Remove the flue cleanout cover & ensure that the flue baffles are fully inserted in the flueways. Replace the cover.
3. Make all water connections &, where fitted, refer to pump kit instructions.

FLUE ALIGNMENT

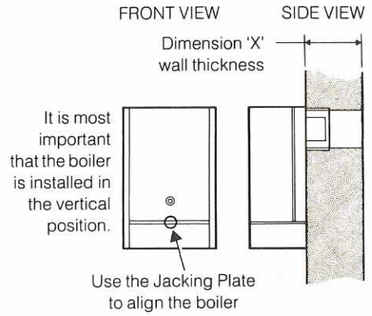

The flue duct should be horizontal, but a slight downward slope, away from the boiler is acceptable.

The wall must be of suitable load -bearing capacity.

12 FITTING THE FLUE DUCT & TERMINAL GRILLE ASSEMBLIES

1. Separate the terminal grille (E) from the terminal duct assembly (C) by removing the two screws (F).

FLUE TERMINAL ASSEMBLY

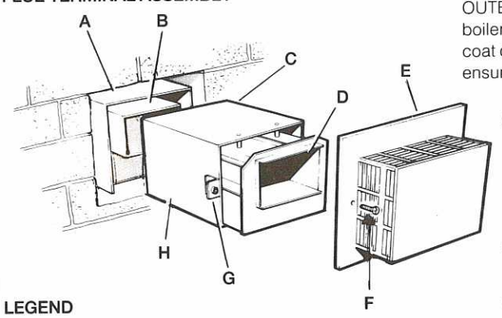

LEGEND

- **A.** Boiler air duct
- **B.** Boiler flue outlet
- **C.** Terminal duct assembly
- **D.** Flue duct
- **E.** Terminal grille
- **F.** Terminal grille fixing screws
- **G.** Side fixing bracket
- **H.** Air duct

2. Smear the sealing compound, packed with the mounting plate, liberally on the INNER surface of the boiler air duct, the terminal flue duct, the OUTER surface of the terminal air duct and the boiler flue duct. Smear the end of each duct with a coat of sealing compound 25 mm (1 in) wide, to ensure a good seal when mated together.

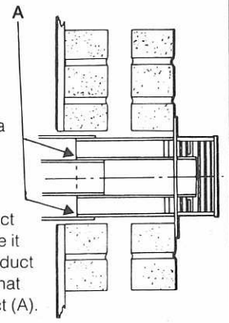

3. From OUTSIDE the building, pass the duct assembly (C) through the opening & slide it into the boiler outlet. Ensure that the flue duct (D) slides OVER the boiler flue outlet, & that air duct (H) slides INTO the boiler air duct (A).
4. When correctly entered, push the terminal duct assembly (C) fully in, until the outermost side fixing brackets (G) contact the wall face.
5. Make good between wall ducts (inside & outside building) such that the innerside fixing brackets are firmly embedded & held in the wall.
6. When thoroughly dry, fasten the terminal grille (E) to the flue duct assembly (D) with the two screws (F).
7. Fit the terminal guard if required.

13 FLUE EXTENSION DUCTS

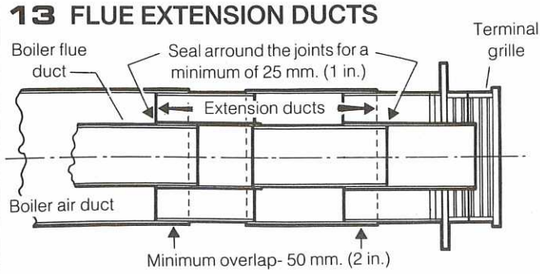

Extension ducts are available for installation where wall thickness exceeds 406 mm (16 in.). They are used to bridge the gap between the appliance terminal box and the flue duct assembly, No other method is to be used or the gap left unbridged.

Fitting the Extension Duct

1. The extension duct has ends of unequal size, corresponding to the metal thickness. Take the larger duct & apply sealing compound over 25 mm (1 in) of the OUTER surface of the SMALLER end.
2. Apply sealing compound to 25 mm (1 in) of the INNER surface of the boiler terminal air duct- this is the OUTER duct. Slide the SMALL end of the air duct extension through the wall opening, & approximately 50 mm (2 in) into the boiler terminal air duct.
3. Apply sealing compound on the INSIDE of the LARGE end of the flue duct extension & slide it OVER the boiler flue duct for 50 mm (2 in).
4. Apply sealing compound liberally to the first 25 mm (1 in) of the INNER surface of the air duct extension & the OUTER surface of the terminal grille air duct. Apply the sealing compound to the inside of the terminal flue duct.
5. Fit the terminal duct assembly from OUTSIDE the building. The terminal grille MUST be removed by means of the screws (F)
6. Slide the flue duct OVER the extension flue duct, and the air duct INTO the extension air duct.
7. Push the terminal duct assembly inwards until the outermost side fixing brackets contact the wall surface.
8. Make good between wall ducts inside & outside the building, such that the innerside fixing brackets are firmly embedded and held in the wall.
9. When thoroughly dry, fasten the terminal grille (E) to the flue duct assembly (D) with the two screws (F).
10. Fit the terminal guard if required.

14 GAS CONNECTION

A MINIMUM gas pressure of 20 mbar (8 in.w.g.) MUST be available at the boiler inlet.
The main gas cock is on the left hand side of the control valve, below the boiler, and connection to the gas supply MUST be from the REAR of the boiler, and from BELOW.

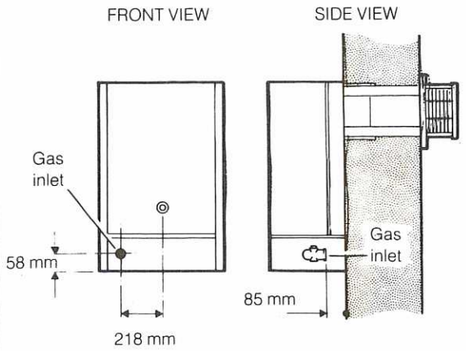

Also refer to section headed Gas Supply- page 3

15 ELECTRICAL CONNECTIONS

WARNING: The appliance MUST be efficiently earthed.

A mains supply of 240 V ~ 50 Hz, Single Phase, is required.

All external controls & wiring MUST be suitable for mains voltage.
Wiring should be in 3- core PVC insulating cable, NOT LESS than 224/0.2 mm (0.75 mm²) to BS.6500 Table 16.

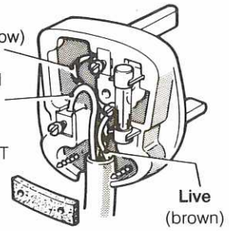

All wiring external to the boiler, including the room thermostat etc., MUST be in accordance with the latest I.E.E. Wiring Regulations and Local Regulations which apply.
The supply connection may be made via a removable plug to an unswitched shuttered socket outlet and should such a plug be used for connection to the mains, it MUST be of 3-pin type, wired as shown, fused at 3 A and complying with the requirements of BS.1363.
Alternatively a fused, double pole switch, having at least a 3 mm (1/8 in) contact separation in both poles and serving only the boiler may be used.

16 ELECTRICAL CONNECTIONS

Note: If the optional programmer kit is to be fitted, refer to the instructions provided with kit, ignore this Frame and go to frame 17

The internal wiring of the control box is also shown in frame 18.
A wiring diagram is also contained in the Lighting Instructions (inside the control pod door). A plug & socket connector is provided on the boiler control box for mains supply.

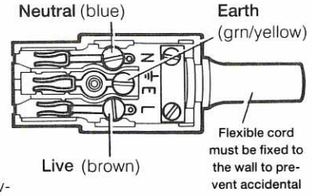

Flow Wiring Diagram

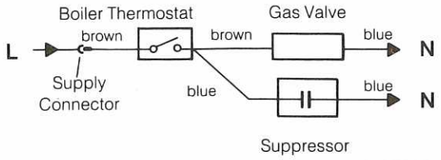

18 PICTORIAL WIRING

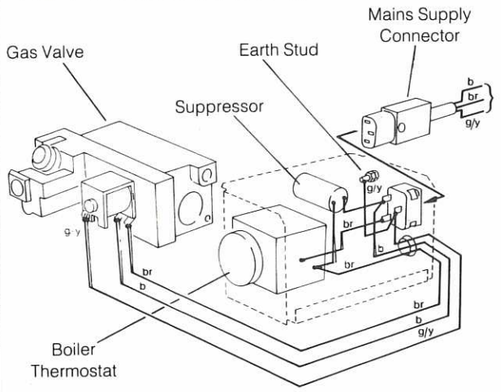

LEGEND

br brown **g/y** green/ yellow
b blue

17 EXTERNAL CONTROLS

The wiring diagrams illustrated in Frames 19- 22 cover the systems mosty likely to be fitted to this appliance.
For wiring external controls to the IDEAL W 2000 RS Boiler, reference should be made to the system wiring diagrams supplied by the relevant Manufacturer, in conjunction with the wiring diagrams shown in Fames 16 and 18.

Difficulty in wiring should not arise, providing the following directions are observed.

1. Controls that switch the system ON & OFF, e.g. a time switch, MUST be wired, in series, in the live mains lead to the boiler.
2. Controls that over-ride an ON/ OFF control, e.g. a frost thermostat, MUST be wired into the mains lead, in parallel, with the control(s) to be over-ridden- refer to Frame 22.
3. Controls that switch the circulation pump only ON and OFF e.g. a room thermostat, MUST be wired, in series, with the pump in the live pump lead.
4. If a proprietary system is used, follow the instructions supplied by the Manufacturers.
5. SYSTEM DESIGNS FEATURING CONTROLS OR WIRING ARRANGEMENTS , WHICH ALLOW THE BOILER TO FIRE WHEN THERE IS NO PUMPED OR GRAVITY CIRCULATION TAKING PLACE, SHOULD NOT BE FITTED.

Advice on required modifications to the wiring may be obtained from the component Manufacturers.

Note: 1. Connections between a frost thermostat and the time control should be made without disturbing other wiring.
2. A frost thermostat should be sited in a cool place in the house, but where it can sense heat from the system.

Wire the mains connector, supplied strapped to the control box, as follows:

Live (brown) to **L**
Neutral (blue) to **N**
Earth (green/yellow) to ▼

The connector may now be plugged into the control box,

Note: When the optional programmer kit is fitted, the incoming mains lead should be connected to the programmer mains plug. The boiler control box three-pin plug should be wired in accordance with the system diagrams shown in Frames 19 to 22 and the Programmer Installation Instructions.

19 MID POSITION VALVE

Pumped only

Notes:
1. Some earth wires are omitted for clarity. Ensure proper earth continuity when wiring
2. Numbering of terminals on thermostats is specific to the Manufacturer.
3. This is a fully controlled system - set the boiler thermostat to maximum.
4. Switchmaster 'Midi' is similar in operation, but the wiring differs slightly; see Manufacturer's literature.

LEGEND

b - blue gy - grey r - red
bk - black g - green y - yellow
br - brown or - orange w - white

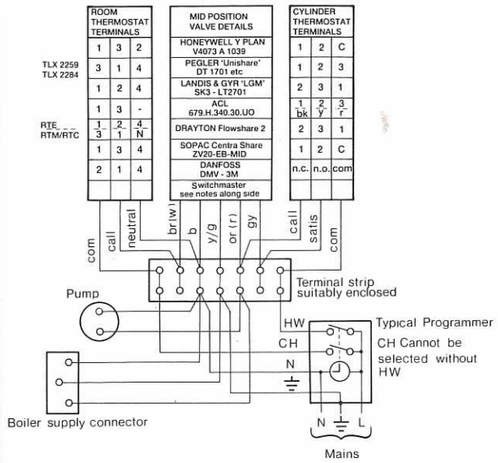

20 TWO SPRING CLOSED VALVES

Pumped only

Notes:
1. Some earth wires are omitted for clarity. Ensure proper earth continuity when wiring
2. Numbering of terminals on thermostats is specific to the Manufacturer.
3. This is a fully controlled system - set the boiler thermostat to maximum.
4. Switchmaster valve has grey & orange auxillary switch leads, but the grey wire must be connected to the live supply.

LEGEND

b - blue gy - grey bk - black
br - brown or - orange w - white
r - red

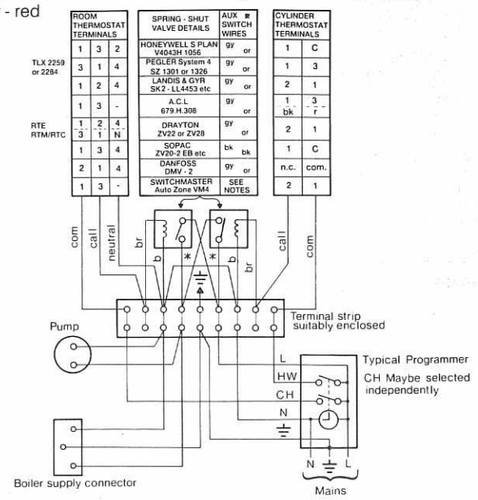

21 HONEYWELL 'C' PLAN

Gravity HW & pumped CH

Notes:
1. Some earth wires are omitted for clarity. Ensure proper earth continuity when wiring
2. Numbering of terminals on thermostats is specific to the Manufacturer.

LEGEND

w - white bk - black br - brown
or - orange b - blue gy - grey
g - green r - red y - yellow

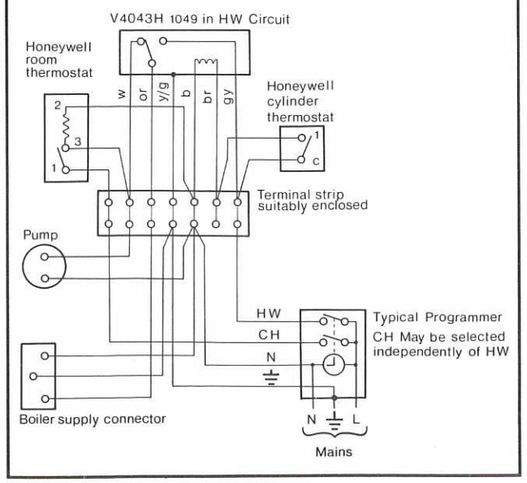

22 FROST PROTECTION

A. Double pole frost stat', e.g. SOPAC TA347.04

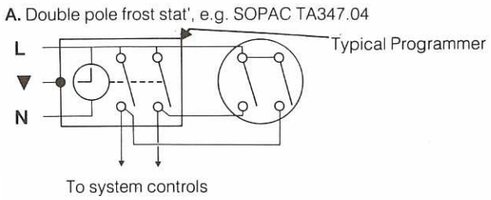

B. Change-over frost stat', (shown satisfied)

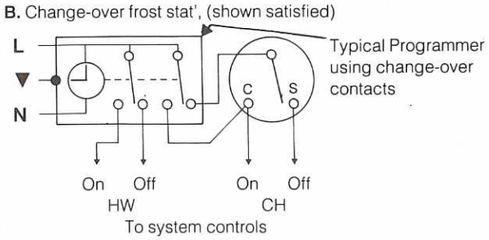

Central heating systems fitted wholly inside the house do not not normally require frost protection, as the house acts as a 'storage heater' & can normally be left at least 24 hrs. without frost damage. However, if parts of the pipework run outside the house, or if the boiler will be left off for more than a day or so, then a frost stat' should be wired into the system. This is usually done at the programmer, in which case the programme selector switches are set to 'Off' & all other controls MUST be left in the running position. The frost stat' should be sited in a cold place, but where it can sense heat from the system. Wiring should be as shown, with minimal disturbance to other wiring of the programmer. Designation of the terminals will vary, but the programmer and thermostat manufacturer's leaflets will give full details. Diagram A shows a double pole frost stat', which should suffice for all systems which do not use the 'OFF' terminals of the programmer. Diagram B shows a 'change-over' frost stat', which will cover most systems which do use 'CH OFF'. If, however, on such a system, the HW pipework is in an isolated part of the house, a second frost stat' may be used to protect it. If in doubt, ask your installer for advice.

23 COMMISSIONING & TESTING

(a) Electrical Installation

1. Checks to ensure electrical safety should be carried out by a competent person.
2. ALWAYS carry out preliminary electrical system checks as detailed on the instructions for the British Gas Multimeter, or similar test meter.
3. Refit the control box cover.

(b) Gas Installation

1. The whole of the gas installation, including the meter, MUST be inspected and tested for soundness, and purged in accordance with the recommendations of BS.6891
2. Purging air from the gas installation may be expedited by loosening the union on the gas service cock and purging until gas is smelled.
3. Retighten the union and check for gas soundness.

WARNING: Whilst effecting the required gas soundness test and purging air from the gas installation, open all windows and doors, extinguish naked lights and DO NOT SMOKE.

24 INITIAL LIGHTING

1. Check that all drain cocks are CLOSED, and that the stop valves in the flow and return lines are OPEN and that the thermostat phial is in its pocket.
2. Check that the gas service cock (I) is ON and that the boiler thermostat control knob (D) is OFF. Fit the boiler casing (Frame 25) and make programmer electrical connections if fitted (Frame 6 - Routine Servicing).
3. Loosen the screw in the burner pressure test nipple (F) and connect a gas pressure gauge via a flexible tube.
4. Slide the gas control button (A) to the RIGHT until resistance is felt and then release it. WAIT FOR THREE MINUTES.
5. Push in and retain fully depressed the gas control button (A). Press and release the piezo unit button (E) repeatedly until the pilot is seen to light.
6. Hold the gas control button depressed for 15 seconds after the pilot burner has ignited.
7. If the pilot burner fails to remain alight at this stage, repeat the procedure detailed above but wait longer than 15 second before releasing the gas control button.
8. Check the appearance of the pilot flame to ensure that it envelopes the tip of the thermocouple and is approximately 25 mm (1 in) long.
   The pilot flame is factory set and no adjustment should be necessary. If the pilot flame is incorrect refer to Frame 7 of the Routine Servicing Instructions.
9. Check that the electricity supply and all external controls are ON.
10. Set the boiler thermostat control knob to position 6 and check that the burner cross lights smoothly from the pilot flame.
11. Test for gas soundness around the boiler gas component joints, available at this time, using leak detection fluid.
12. Operate the boiler for ten minutes to stabilise the burner temperature.
13. Check the burner setting pressure against the relevant values quoted in Table 2, Page 2.
14. If the burner setting pressure requires adjustment, remove the gas valve cover. Adjust the pressure adjusting screw (G) as required (CLOCKWISE to DECREASE).
15. Replace the valve cover.
16. Set the boiler thermostat control knob to OFF.
    Remove the pressure gauge tube, and replace the sealing screw in the pressure test nipple.
    Isolate the electrical supply.
    Remove the boiler casing (Frame 2, Routine Servicing).
    For programmer models, insert the mains electrical plug (previously in base of programmer) into the rear of the boiler control box.
17. Turn on the electrical supply & set the thermostat control knob to 6. Check for gas soundness at the injector, pilot supply connections and the pressure test point screw.
    Note: Programmer models will not have the pump running for this short check.
18. Set thermostat control knob to off & isolate electrical supply.
19. Fix the self adhesive arrow (supplied in the Hardware Pack) to the data plate on the top right-hand side of back panel, indicating the intended burner setting pressure heat input.
20. Refit the boiler casing (Frame 25) ensuring that, on the programmer models, the mains electrical plug is inserted in the programmer (Routine Servicing Frame 6).

LEGEND

A. Gas valve control button
B. Sight glass
C. Pilot pressure adjuster
D. Thermostat control knob
E. Piezo unit ignition
F. Burner pressure test nipple
G. Main burner pressure adjuster
H. Inlet pressure test nipple
I. Gas service cock

BOILER CONTROLS

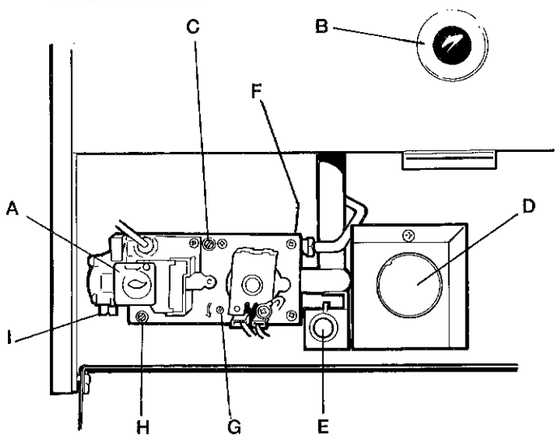

Note: Controls are shown with the gas valve cover removed.

25 FITTING THE CASING

1. Check that the sealing strip is in place along the four rear edges of the boiler casing.

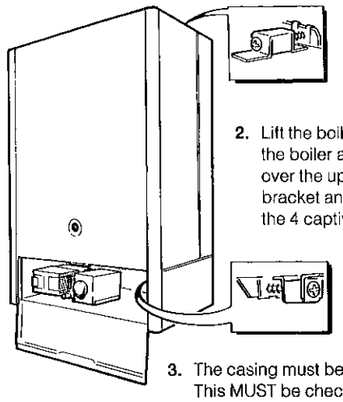

2. Lift the boiler casing up to the boiler assembly, locate over the upper support bracket and secure with the 4 captive screws.
3. The casing must be seated correctly. This MUST be checked by ensuring that, at the top and bottom edges of the casing, the seal is compressed over its complete length.

26 GENERAL CHECKS

Make the following checks for correct operation:

1. Turn the boiler thermostat OFF and ON, and check that the main burner is extinguished and relit in response.
2. Check the appearance of the pilot flame to ensure it envelopes the tip of the thermocouple and is approximately 25 mm (1 in.) long.
   Refer - Pilot Burner Servicing (Frame 7 - Routine Servicing).

   Flame Failure Device

   Check the operation of the flame failure device in the gas control valve as follows:

   (a) Extinguish the pilot flame by closing the gas service cock (I), (the casing bottom panel must be removed to facilitate service cock isolation), and note the time taken for the flame failure device to shut down - identified by a click within the gas control valve. This MUST NOT be longer than 50 seconds.

   (b) Open the gas service cock, refit the casing bottom panel and re-light the pilot.
3. With the burner alight again, slide the gas control button to the right until resistance is felt, and then release it. The burner and pilot flames should shut down immediately.
   Note: A latch in the gas control provides a safe delay period before the boiler can be re-lit.
4. The correct operation of ANY programmer, and all other system controls, should be proved. Operate each control separately, and check that the main burner, or circulating pump, as the case may be, responds.
5. With the system HOT, examine all water connections for soundness. Then turn OFF the gas, electricity and water supplies to the appliance, and drain down whilst the system is still hot, in order to complete the flushing process. Refill and vent the system and again check for water soundness.
6. Finally, set the controls to the User's requirements.
   The temperatures quoted below are approximate & vary between installations:

Thermostat Knob Setting	Flow temperature °C	°F
1	54	130
2	60	140
3	66	150
4	71	160
5	77	170
6	82	180

WARNING: The boiler MUST NOT be operated with the casing removed (other than for prescribed tests).

27 HANDING OVER

After completing the installation and commissioning of the system then the Installer should hand over to the Householder by the following actions:

1. Hand the User's Instructions to the Householder and explain his or her responsibilities under the Gas Safety (Installation and Use) Regulations 1984.
2. Draw attention to the Lighting Instruction Label affixed.
3. Explain and demonstrate the lighting and shutting down procedures.
4. The operation of the boiler and the use and adjustment of ALL system controls should be fully explained to the Householder, to ensure the greatest possible fuel economy, consistant with household requirements of both heating and hot water consumption.
   Advise the User of the precautions necessary to prevent damage to the system, and to the building, in the event of the system remaining inoperative during frosty conditions.
5. Explain the function and the use of the boiler thermostat and external controls.
6. Explain the function of the boiler over-heat thermostat (ONLY FITTED FOR SEALED SYSTEM USE) and emphasise that if cut out persists, the boiler should be turned off and the local Heating Installer consulted.
7. Explain and demonstrate the function of time and temperature controls, radiator valves, etc for the economic use of the system.
8. If any Programmer Kit is fitted, then draw to the Programmer Kit User's instructions and hand them to the Householder.
9. Stress the importance of regular servicing by the Local Gas Region or by a qualified Heating Engineer and that a comprehensive service should be carried out AT LEAST ONCE A YEAR.

1 SCHEDULE

The following should be carried out at periods not exceeding one year.

(a) Light the boiler and carry out a pre-service check, noting any operational faults.
(b) Clean the main burner. (c) Clean the heat exchanger.
(d) Clean the main and pilot injectors.
(e) Check that the flue terminal is unobstructed and that the flue system, including the inner cover is sealed correctly.
(f) If the appliance has been installed in a compartment check that the ventilation areas are clear.

The servicing procedures are covered more fully in Frames 2 to 7 and must be carried out in sequence.

WARNING: Disconnect the electrical supply.

IMPORTANT: After completing servicing or exchange of components always test for gas soundness and carry out functional checks as appropriate.

Note: In order to carry out either servicing or replacement of components, the boiler casing must be removed (Frame 2).

IMPORTANT: When work is complete the casing MUST be correctly refitted, ensuring that a good seal is made. The boiler must NOT be operated if the casing is not fitted, other than for prescribed tests.

2 BOILER CASING REMOVAL

1. Open the controls pod door. Unhinge and remove door,
2. Disconnect the connector plug located at the rear of the control box.

   (If a programmer is fitted follow steps 3, 4, 5, and 6 otherwise proceed to 7).

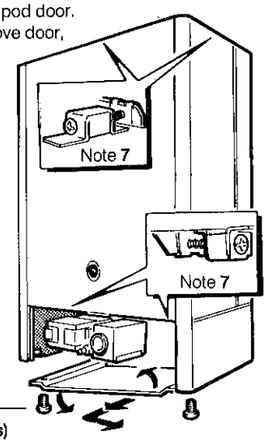

See note 4 (programmer models)

PROGRAMMER MODELS

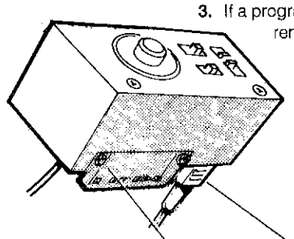

3. If a programmer is fitted, remove the two screws retaining the BOTTOM of the programmer to the control casing bottom panel.
4. Remove the screws retaining the control casing bottom panel and slide the panel out.
5. Pull out the mains connector plug from the base of the programmer.
6. Remove the two screws securing the external controls/pump plug connector and pull out the connector.

STANDARD & PROGRAMMER MODELS

7. Release the four captive screws at the top and bottom of the casing, lift the casing off the boiler and retain in a safe place.
8. Isolate the gas supply at the service cock.

3 BURNER AND CONTROLS ASSEMBLY REMOVAL

1. Undo the union on the gas service cock.
2. Unclip the boiler thermostat capillary from the backplate.

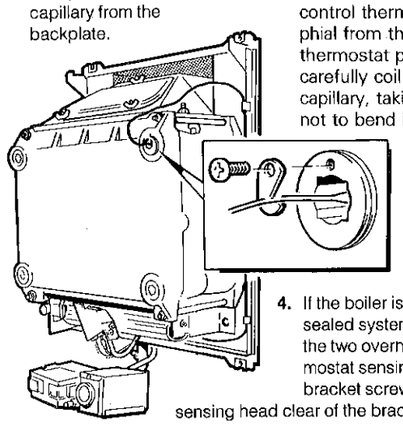

3. Remove the boiler control thermostat phial from the thermostat pocket and carefully coil up the capillary, taking care not to bend it tightly.
4. If the boiler is used on a sealed system slacken the two overheat thermostat sensing head bracket screws & pull the sensing head clear of the bracket.

Remove the overheat thermostat capillary from its spring clip.

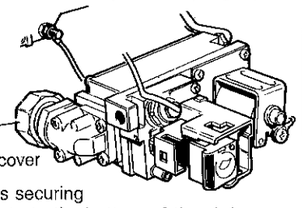

5. Remove the two nuts securing the burner sealing plate to the bottom of the air box.

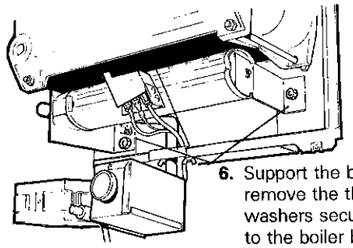

6. Support the burner and remove the three nuts and washers securing the burner to the boiler back panel. (2 left, 1 right).
7. Remove burner assembly and controls to a safe place for inspection and attention.

4 CLEANING THE BURNER ASSY.

1. Brush off any deposits that may have fallen on to the burner head, ensuring the flame ports are un-obstructed and remove any debris that may have collected.
   Note: Brushes with metallic bristles MUST NOT be used.
2. Remove the main burner (Refer Frame 17)
3. Remove the main burner injector, ensure there is no blockage or damage.
4. Refit injector using an approved jointing compound sparingly
5. Inspect the pilot burner, thermocouple and spark electrode: ensure they are clean and in good condition. Check that:
   a) The pilot burner injector is not blocked or damaged (Refer Frame 11 for removal details).
   b) The pilot burner is clean and unobstructed.
   c) The spark electrode is clean and undamaged.
   d) The spark lead is in good condition & securely connected
   e) The spark gap is correct - Refer Frame 7.
   f) The thermocouple tip is not burned or cracked.
   g) The position of the thermocouple relative to the pilot burner and main burner is correct - Refer Frame 7.
   h) The thermocouple terminal at the gas valve is clean.
6. Re-assemble the burner/controls assembly in reverse order.

Note: The pilot shield is located around the pilot assy. bracket.

5 CLEANING THE FLUEWAYS

1. Remove the cleanout cover by undoing the three wing nuts.
2. Remove the flue baffles through cleanout cover opening. (Lift both baffles at the centre. Remove one at a time).

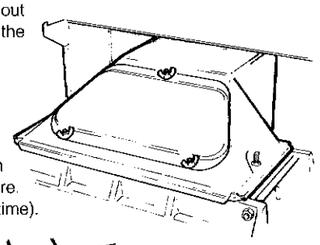

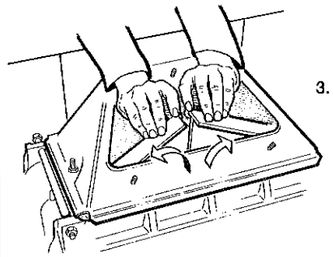

3. Remove all loose deposits from the heat exchanger, particular between the fins, using a suitable brush.

6 RE-ASSEMBLY

Re-assembly in reverse order to that shown in Frames 2 to 5.

1. Refit the flue baffles.
2. Refit the collector hood cleanout cover, replacing any damaged or deteriorating gaskets.
3. Refit the burner and controls assembly.
4. Re-connect the gas supply, and turn on the gas supply at the service cock.
5. Ensure the sightglass in the boiler casing is clean and undamaged.
6. Refit the boiler casing and tighten the four captive screws.
7. Ensure the correct case sealing.
8. For programmer models, connect the mains supply plug to base of programmer.
9. Refit external controls/pump plug connector (2 screws) and connect the remaining plug to the control box.
10. For non programmer models connect the mains supply plug to the control box.
11. Slide the bottom panel into the casing surround, refit the fixing screws for bottom panel and programmer if fitted.
12. Refit the controls pod door.

7 PILOT BURNER SETTING

1. Turn on the gas supply.
2. Light the pilot and check that the pilot flame envelopes the tip of the thermocouple and is approximately 25 mm (1 in) long. The pilot adjsuter screw is factory set to maximum and no further adjustment should be necessary. However, if the pilot flame appears small, check the adjustment of the pilot pressure adjuster screw.
   a) Press the green button to the right in the direction of the arrow to turn pilot off.

Ideal W2000 RS Boilers- Pilot Relationship Diagram.

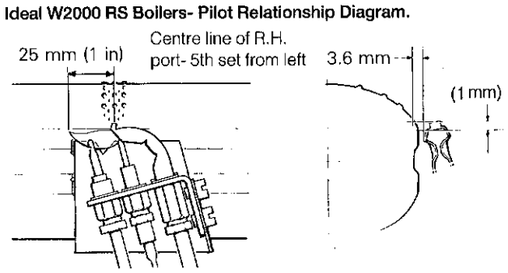

   b) Turn the pilot pressure adjuster screw (A), see Frame 24-Installation section, CLOCKWISE until fully CLOSED.
   c) Turn the pilot pressure adjuster screw ANTI-CLOCKWISE four full turns, to give maximum setting.
   d) Relight the pilot burner- Frame 24- Installation section.

NOTE: Heat Input/ Setting Pressure: After each occasion of servicing, reference should be made to Table 2, which quotes details of the rated output, with the related burner setting pressure & the heat input. Any required adjustment sould be made by using the pressure adjustment screw, refer to Frame 24, Installation section.

Detail of spark gap

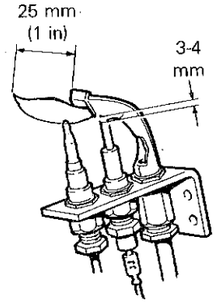

View with pilot shield removed

REPLACEMENT OF PARTS

8 GENERAL

When replaceing any component:

a) Isolate the electricity supply
b) Turn off the gas supply
c) Remove the boiler casing (see frame 2).

IMPORTANT: When work is complete the casing MUST be correctly refitted-ensuring that a good seal is made.

The boiler MUST NOT be operated if the casing is not fitted (other than for prescribed tests)

9 SIGHTGLASS REPLACEMENT

1. Refer to Frame 8
2. Unfasten the two nuts and washers holding the sight-glass assembly to the casing front panel.

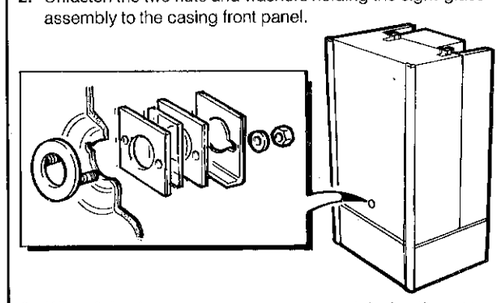

3. When fixing the new assembly, make certain that the parts are in the correct order.
   The frame MUST have the return edge at the bottom.
4. Retighten the two nuts to ensure an airtight seal.
   Do NOT overtighten.
5. Replace the boiler casing- refer to Frame 6.

10 PIEZO UNIT REPLACEMENT

1. Refer to Frame 8 **Note:** Gas control valve not shown.

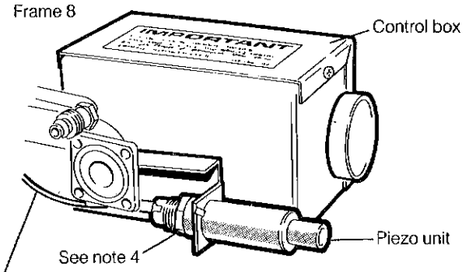

2. Disconnect the ignition lead from the Piezo unit.
3. Remove the gas control cover.
4. Unscrew the locking nut at the rear of the piezo unit mounting bracket.
5. Remove the piezo unit, refit the new unit & re-assemble in reverse order.
6. Replace the boiler casing- Frame 6.
7. Check the operation of the new Piezo unit.

11 PILOT BURNER REPLACEMENT

1. Refer to Frame 8.

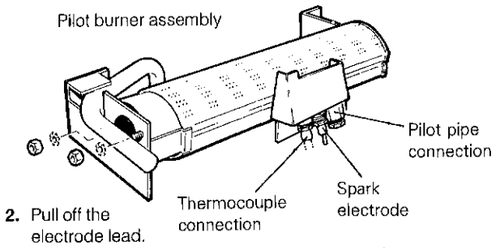

2. Pull off the electrode lead.
3. Undo the thermocouple connection and pull the thermocouple clear.
4. Remove the nut retaining the electrode & pull the electrode from the pilot assembly.
5. Undo the pilot pipe connection and pull the pipe clear. **Note:** Do not lose the pilot injector which will fall out as the pilot pipe is disengaged
6. Remove the two screws at the sides of the assembly retaining the pilot burner and shield.

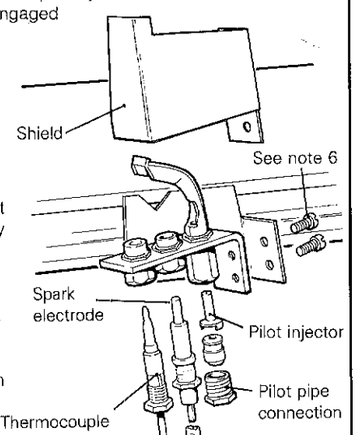

7. Replace the pilot burner assembly (taking care to replace pilot shield) and refit in reverse order. Ensure that the pilot injector is fitted correctly in the new pilot burner.
8. Check the pilot burner relationship to the main burner & spark gap, Refer to Frame 7, Routine Servicing
9. Check for gas soundness of the pilot supply (Refer to Frame 24 - Installation section if a is programmer fitted).
10. Replace the boiler casing- Frame 6.
11. Check the pilot length. Refer Frame 7- Routine Servicing.
12. Check the pilot operation (cross lighting, holding in time etc).

12 SUPPRESSOR REPLACEMENT

1. Refer to Frame 8
2. Pull off the thermostat knob and remove the control box cover.

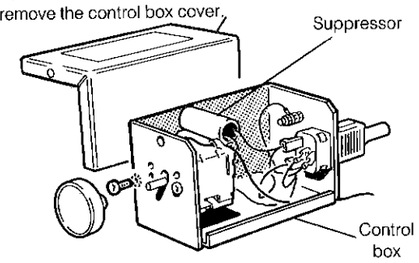

3. Remove the suppressor by pulling off the two push-on terminals.
4. Fit the new suppressor and re-assemble in reverse order, ensuring all electrical connections are correctly remade. (Refer to Wiring Diagrams)
5. Replace the boiler casing - Refer Frame 6.
6. Check the operation of the control thermostat.

13 CONTROL THERMOSTAT REPLACEMENT

1. Refer to Frame 8.
2. Remove the burner /controls assembly (Frame 3).
3. Undo the two nuts securing the sealing plate to the burner manifold plate and remove with the sealing gasket.

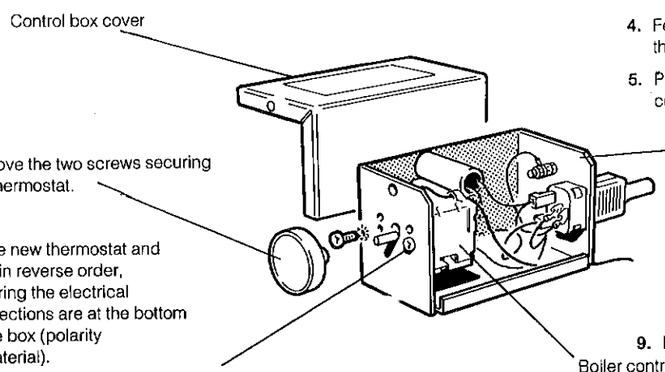

4. Feed the control thermostat capillary back through the burner manifold plate.
5. Pull off the thermostat knob and remove the control box cover.
6. Pull off the two electrical connections from the thermostat head.
7. Remove the two screws securing the thermostat.
8. Fit the new thermostat and re-fit in reverse order, ensuring the electrical connections are at the bottom of the box (polarity immaterial).
9. Replace the boiler casing - Frame 6.
10. Check the operation of the new thermostat - refer Frame 26, Installation section.

Note: Use the bottom two fixing holes for the thermostat. Ensure phial is correctly replaced in pocket (diagram in Frame 3) & capillary routed as shown in Frame 10 -Installation.

14 OVERHEAT THERMOSTAT REPLACEMENT (Optional extra for sealed systems only)

1. Refer to Frame 8.

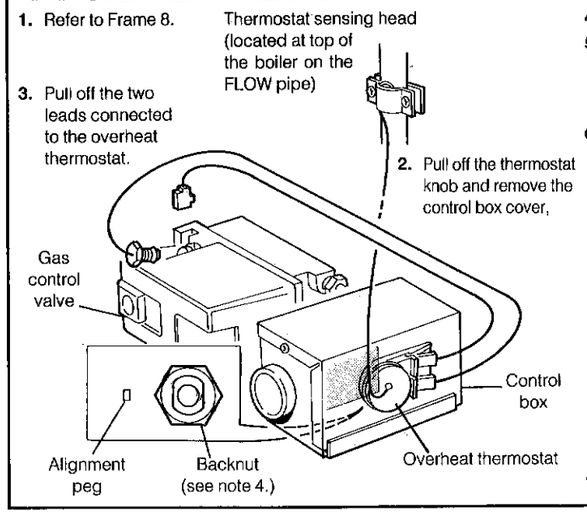

2. Pull off the thermostat knob and remove the control box cover,
3. Pull off the two leads connected to the overheat thermostat.
4. Remove the backnut retaining the overheat thermostat.
5. Slacken the two screws retaining the thermostat sensing head bracket to the flow pipe. Pull the sensing head clear of the bracket and remove the capillary from the bottom spring clip.
6. Fit the new overheat thermostat & re-assemble in reverse order (polarity immaterial). Ensure that the thermostat sensing head is correctly positioned underneath the bracket on the flow pipe. Tighten the bracket screws & fit the capillary into the bottom spring clip.

Overheat thermostat capillary route

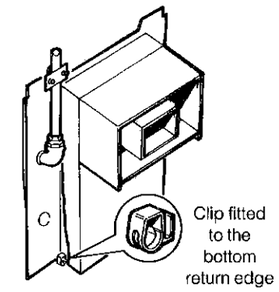

7. Replace the boiler casing (Refer to Frame 8).

15 SPARK ELECTRODE & LEAD REPLACEMENT

1. Refer to Frame 8.
2. Remove the burner/ controls assembly (Frame 3)
3. Disconnect the ignition lead from the Piezo unit and spark electrode. Remove from the clip securing the lead to the pilot pipe. Remove the thermocouple and then remove the electrode by undoing the retaining nut at the pilot burner.

Detail of burner manifold sealing plate

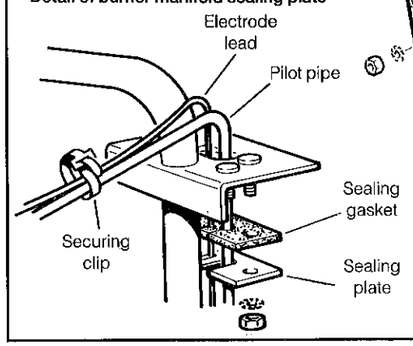

Detail of removed burner assembly

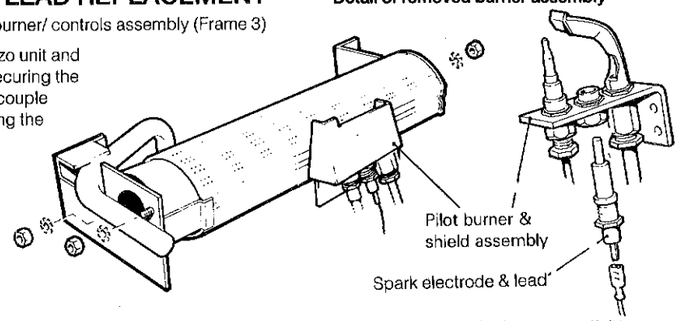

4. Undo the two nuts securing the sealing plate to the burner manifold, remove plate and gasket.
5. Remove the spark electrode lead from the burner manifold sealing plate.
6. Refit the new electrode and lead in reverse order.
7. Check the spark gap- refer to Frame 7, Routine Servicing.
8. Replace the boiler casing- refer to Frame 6.
9. Check the pilot ignition.

16 THERMOCOUPLE REPLACEMENT

1. Refer Frame 8.
2. Remove the burner/ controls assembly (Frame 3)
3. Remove the thermocouple from the pilot burner assembly and buckle clip.
4. Remove the gas control valve cover.
6. Remove the thermocouple connection at the gas control valve.

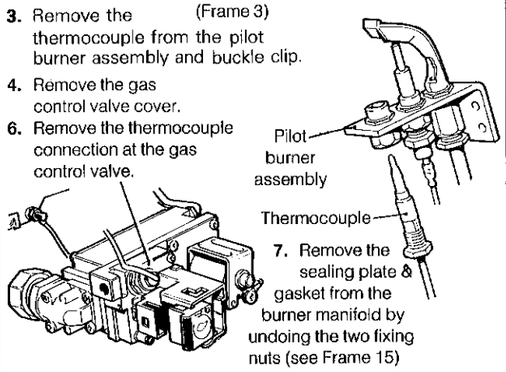

7. Remove the sealing plate & gasket from the burner manifold by undoing the two fixing nuts (see Frame 15)
8. Withdraw the thermocouple & refit the new part. Re-assemble in reverse order. **Note:** Avoid sharp bends in thermocouple
9. Replace the boiler casing- refer to Frame 6.
10. Check the operation of the thermocouple.

17 MAIN BURNER REPLACEMENT

1. Refer Frame 8
2. Remove the two screws retaining the pilot burner and shield assembly

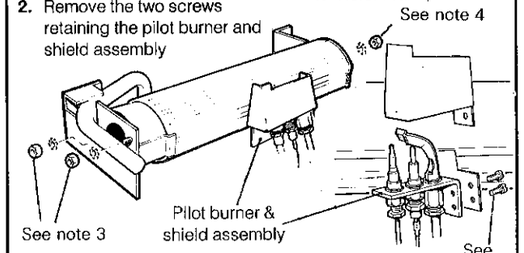

3. Remove the two nuts and washers securing the burner to the gas manifold.
4. Remove the nut and washer securing the burner to the right hand end bracket.
5. Fit the new burner in reverse order. Take care not to damage the burner injector, which is screwed into the gas manifold.
6. Refit the pilot burner assembly.
7. Refit the boiler casing (Refer Frame 6).
8. Check the burner cross lighting and flame stability.

18 GAS CONTROL VALVE REPLACEMENT

1. Refer to Frame 8.
2. Remove the burner/controls assembly (Frame 3).
3. Remove the inlet union arrangement from the gas control valve by undoing the four retaining screws.
4. Remove the piezo unit (Frame 10).
5. Remove the gas control valve cover by unscrewing the central fixing screw.

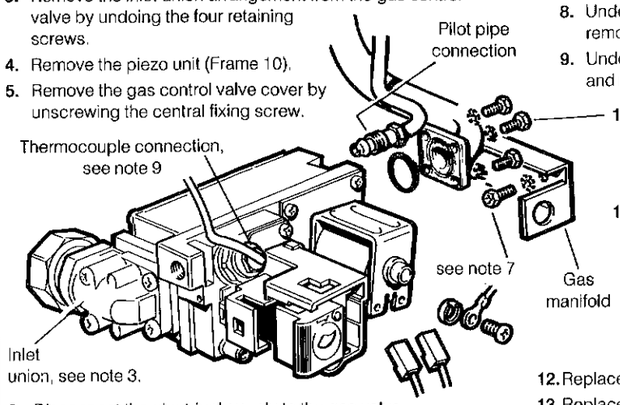

6. Disconnect the electrical supply to the gas valve.
7. Remove the two screws securing the control box to the mounting bracket and remove the box (Remove the overheat thermostat leads if a sealed system kit is fitted).
8. Undo the pilot pipe connection at the gas control valve and remove the pipe.
9. Undo the thermocouple connection at the gas control valve and remove the thermocouple.
10. Undo the four screws securing the gas control valve outlet gas manifold and remove the gas control valve. The sealing 'O' rings should be discarded and new ones fitted.
11. Fit a new valve and re-assemble in reverse order Ensure that:-
    a) The new gas valve is fitted the correct way round, an arrow is engraved on the back indicating gas flow direction.
    b) The 'O' rings are correctly fitted at inlet & outlet flanges.
12. Replace the burner/controls assembly.
13. Replace the boiler casing (Frame 6).
14. Check the gas valve operation.

19 PILOT FILTER REPLACEMENT

1. Refer Frame 8.
2. Remove burner/controls assembly (Frame 3).

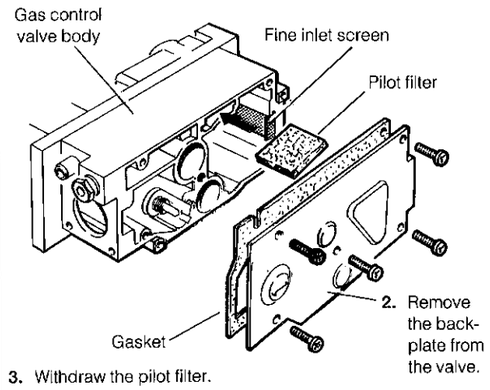

3. Withdraw the pilot filter.
4. Fit the new filter and re-assemble in reverse order.
5. Refit the boiler casing (Refer Frame 6).

21 CASING SEAL REPLACEMENT

1. Refer to Frame 8.

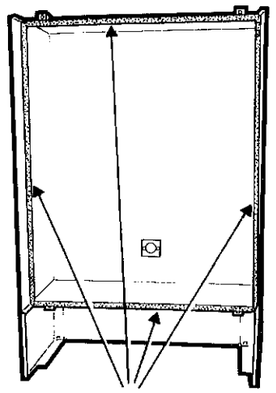

2. Remove the old seal from the channel in the casing surround and replace with a new seal.
3. Replace the boiler casing, refer to Frame 6.

20 HEAT EXCHANGER REPLACEMENT

Note: Refer to Frame 22 of 'Exploded Views', on the next page, for the illustration of any parts itemised below.

1. Refer to Frame 8.
2. Remove the burner/controls assembly (Frame 3).
3. Drain the system.
4. In order to remove the boiler from the wall it is necessary to disconnect all water connections at the rear of the heat exchanger. If this cannot be done because of limited side clearances, the pipes must be cut & then remade on re-assembly. **Note:** If a sealed system kit is fitted then the FLOW pipe must be cut above the overheat thermostat fixing bracket & a fill-in piece must be replaced upon re-assembly. The flow pipe fitted with the overheat themostat MUST NOT discarded.
5. Remove the balanced flue terminal,(Item 36)
6. Remove the screw retaining the bottom jacking plate, (Item 105), to the wall.
7. Lift the boiler off the slots in the wall mounting plate,(Item 37A) & remove from the wall. **WARNING the boiler is heavy.**
8. Place the boiler on its front face and remove all water connections from the rear heat exchanger,(Item 1), tappings - including the distributor tube, (Item 6)
9. Remove the four M8 nuts retaining the heat exchanger to the back panel,(Item 39), and remove the back panel.
10. Remove the two nuts retaining the collector hood,(Item 3).
11. Fit the collector hood to the new heat exchanger (Replace the gasket if necessary). Seal the gaps around the fixing hook bolt with the compound provided. Ensure that the flue baffles, (Item 2), are removed from the old heat exchanger and fitted to the new one.
12. Fit the back panel,(Item 39), to the new heat exchanger.
13. Remove the thermostat pocket,(Item 28), from the old heat exchanger and fit to the new heat exchanger. Plug unwanted tappings with the recessed plugs provided (using a suitable sealing compound for all connections).
14. Replace distributor tube, (ensure index mark on tube aligns with arrow on back panel), & all water connections.
15. Replace the boiler on to the wall. From the outside, ensure that the outer and inner flue duct,(Item 101), connections have been correctly made. If full engagement of the flue components is not possible then the outer flue sections will need to be removed and refitted after remounting the boiler. Make good around the terminal as described in Frame 6-Installation section. From inside check that the outer duct connections have been correctly made.
    Remove the cleanout cover,(Item 5), and check that the flue baffles are correctly seated in the heat exchanger.
16. Refit the bottom jacking plate,(Item 105), wall fixing screw.
17. Remake all water connections; refill system & check for leaks.
18. Re-assemble the remaining boiler parts in reverse order.

22 BOILER ASSEMBLY- Exploded view

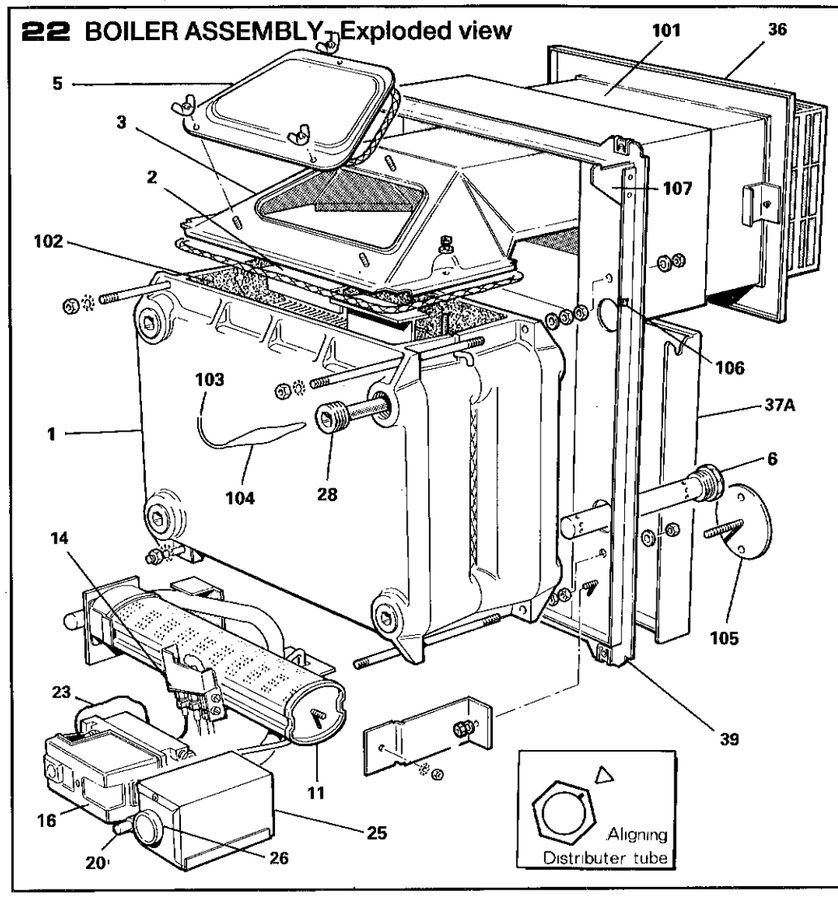

LEGEND

1	Heat exchanger
2	Flueway baffles
3	Collector hood
5	Flue cleanout cover
6	Distributor tube (left or right, one side only)
11	Main burner
14	Pilot burner assembly
16	Gas valve
20	Piezo unit
23	Thermocouple lead
25	Control box
26	Boiler thermostat
28	Boiler thermostat pocket (left or right)
36	Balanced flue terminal
37A	Wall mounting plate
39	Back panel
101	Ducts
102	Heat exchanger flue
103	Thermostat capillary
104	Boiler thermostat phial
105	Jacking plate
106	Thermostat capillary clips
107	Casing support clips

23 BURNER & CONTROLS- Exploded view

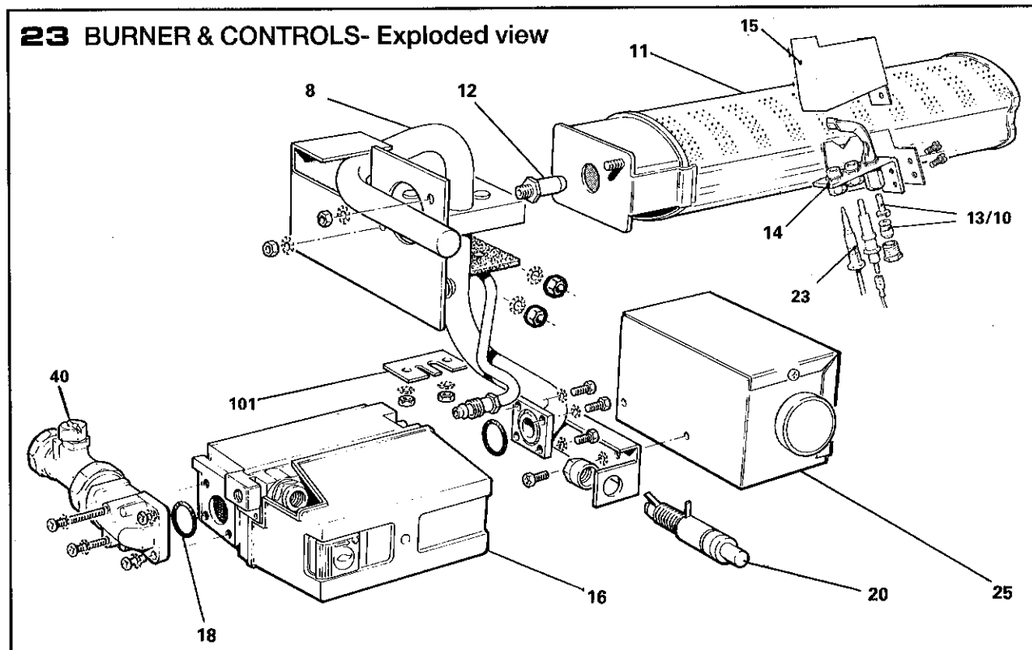

LEGEND

8	Gas manifold	12	Main injector	16	Gas control valve	23	Thermocouple
10/13	Pilot pipe & injector	14	Pilot burner assembly	18	'O' ring	25	Boiler control box
11	Main burner	15	Pilot shield	20	Piezo igniter	40	Gas service cock
						101	Sealing gasket plate

FAULT FINDING

Before attempting any electrical fault finding, ALWAYS carry out the preliminary electrical system checks as detailed on pages 6 - 9 of the Instructions for the British Gas Multimeter, or similar test meter.

Detailed instructions on the cleaning & adjustment or replacement of faulty components are contained in the 'Servicing' section, of this publication.

24 PILOT WILL NOT LIGHT

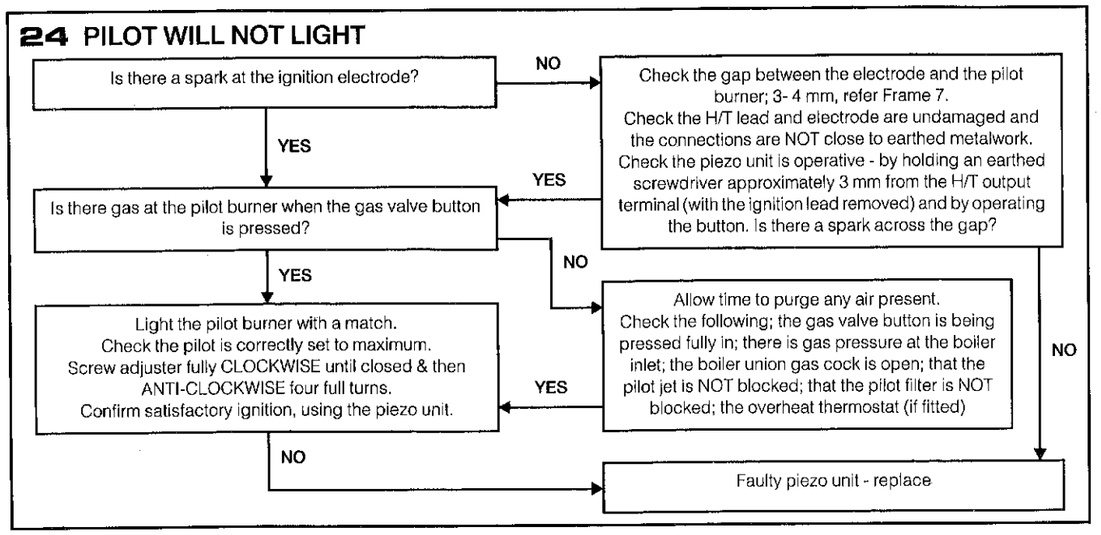

25 PILOT WILL NOT STAY LIT WHEN THE GAS VALVE BUTTON IS RELEASED

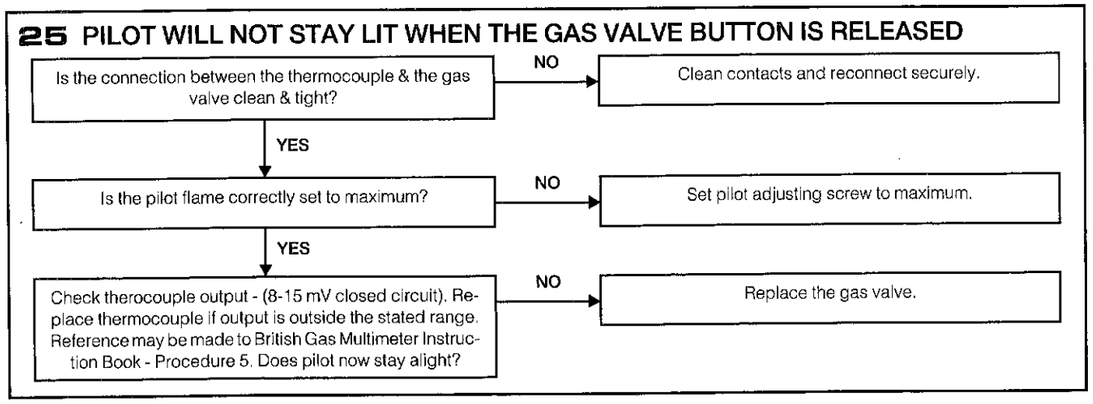

26 PILOT LIT BUT NO MAINS GAS

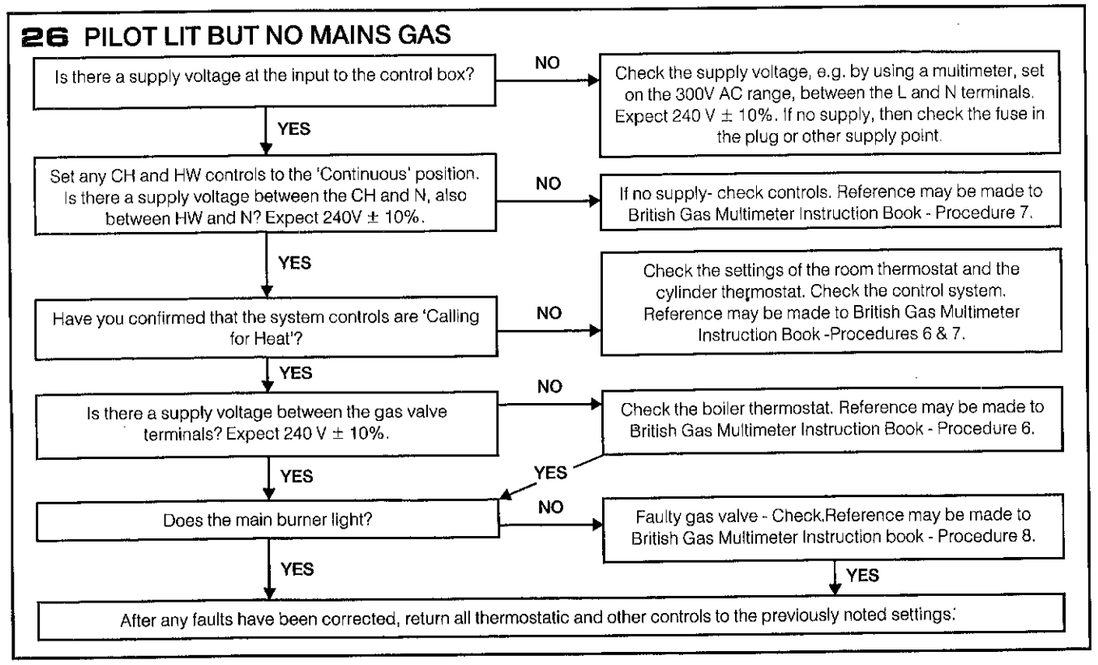

SHORT LIST OF PARTS

The following list comprises parts commonly required as replacements due to damage, expendability, or such that their failure, or absence, is likely to affect safety or performance. This List is extracted from the British Gas List of Parts, which contains all available spare parts.

Details of the British Gas Lists are held by Gas Regions, STELRAD Distributors and by Merchants.

Ideal W 2000 RS 30N, RS 40N, RS 50N & RS 60N GAS BOILERS

When ordering spares, please quote:

1. Boiler Model
2. Appliance G.C. Number
3. Description
4. Maker's Part Number
5. Quantity

Key No.	G.C. Part No.	Description	No. off	Maker's Part No.
7	319 439	Sight glass assembly, comprising, sight glass and frame, two sight glass gaskets, two M4 Hex nuts and two M4 shakeproof washers	1	160.079 333
10	308 188	Main burner, AEROMATIC No. AC 19/123256X Ideal W 2000 RS 30N & 40N	1	199 414 184
	386 739	No. AC 19/ 123256, Ideal W 2000 RS 50N	1	199 514 084
	386 740	No. AC 19/ 123257, Ideal W 2000 RS 60N	1	199 544 084
11		Main burner injector, BRAY		
	398 509	Cat 103- Size 950; Ideal W 2000 RS 30N	1	199 416 069
	389 505	Cat 103- Size 1150; Ideal W 2000 RS 40N	1	199 526 060
	389 510	Cat 103- Size 1450; Ideal W 2000 RS 50N	1	199 436 069
	389 511	Cat 103- Size 1800; Ideal W 2000 RS 60N	1	199 446 069
12	392 935	Pilot burner injector, SIT 0. 977, 113	1	589 038 742
13	308 179	Pilot burner, SIT 0. 140, 020	1	589 410 085
15	395 685	Gas control, HONEYWELL V 4700E 1007, 240 V with 2 'O' rings	1	586 731 900
19	395 705	Piezo unit, VERNITRON 60080	1	589 830 086
20	308 175	Ignition electrode and H/T lead assembly, SIT 007 226	1	586 030 088
21	386 820	Thermocouple, SIT 0 290 174	1	576 410 051
23	.	Control box, including thermostat, thermostat knob & suppressor assembly		
24	383 694	Thermostat RANCO CL6 PO149 with 48 in. capillary.	1	589 410 051
25	341 359	Thermostat knob	1	586 011 517
27	384 689	Suppressor assembly (can type).	1	589 040 030
28	354 776	Mains connector, ASHLEY or BULGIN, to CEE 22,, sheet 5 and BS.4491	1	199 414 031
29	308 194	Boiler casing assembly- white stove enamel, with sightglass trim, foil insulation & also with Key No.7.	1	
33	308 184	Controls casing door- white stove enamel with Lighting Instructions.	1	199 411089
33A	308195	LH/RH Casing Infill Panels	2	199 414 035
34	319 230	Boiler casing sealing strip	1	199 410 094
46	308 185	Overheat thermostat, RANCO LM7 (Sealed systems only)	1	160 004 706

27 SMALL PARTS

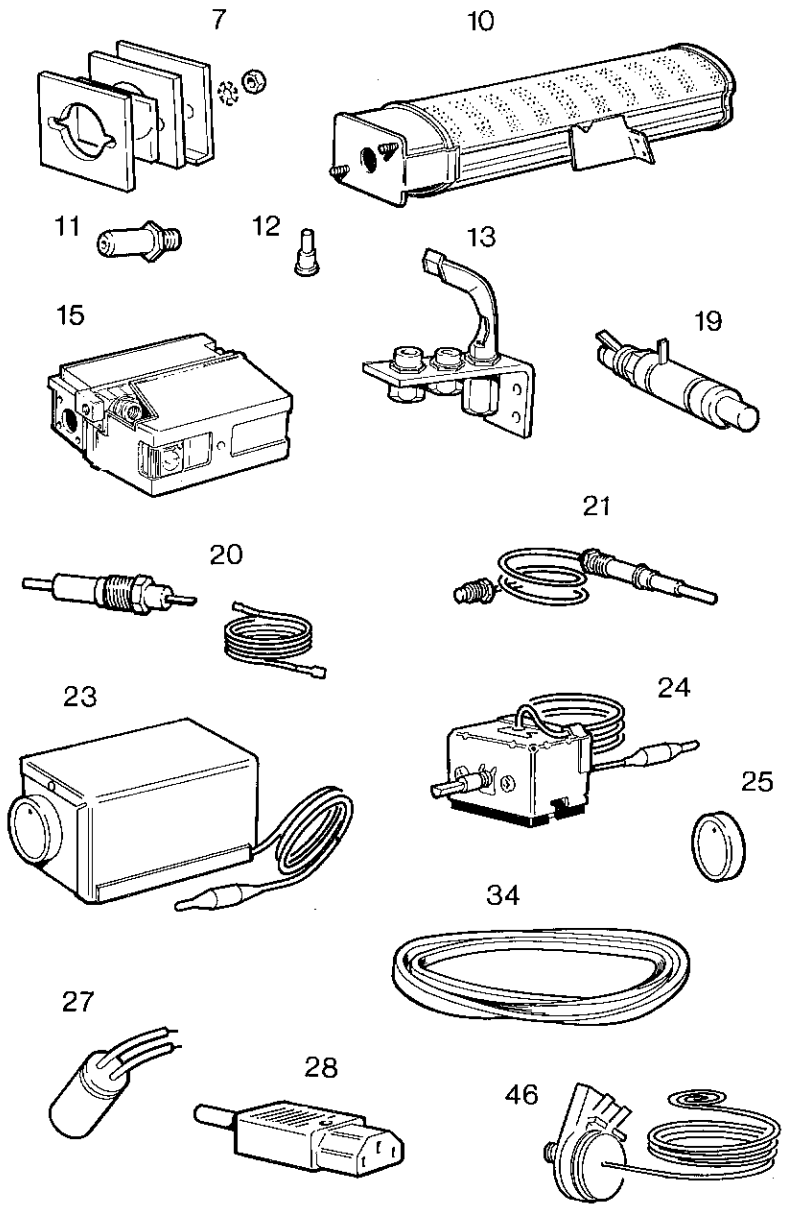

28 BOILER CASING ASSEMBLY

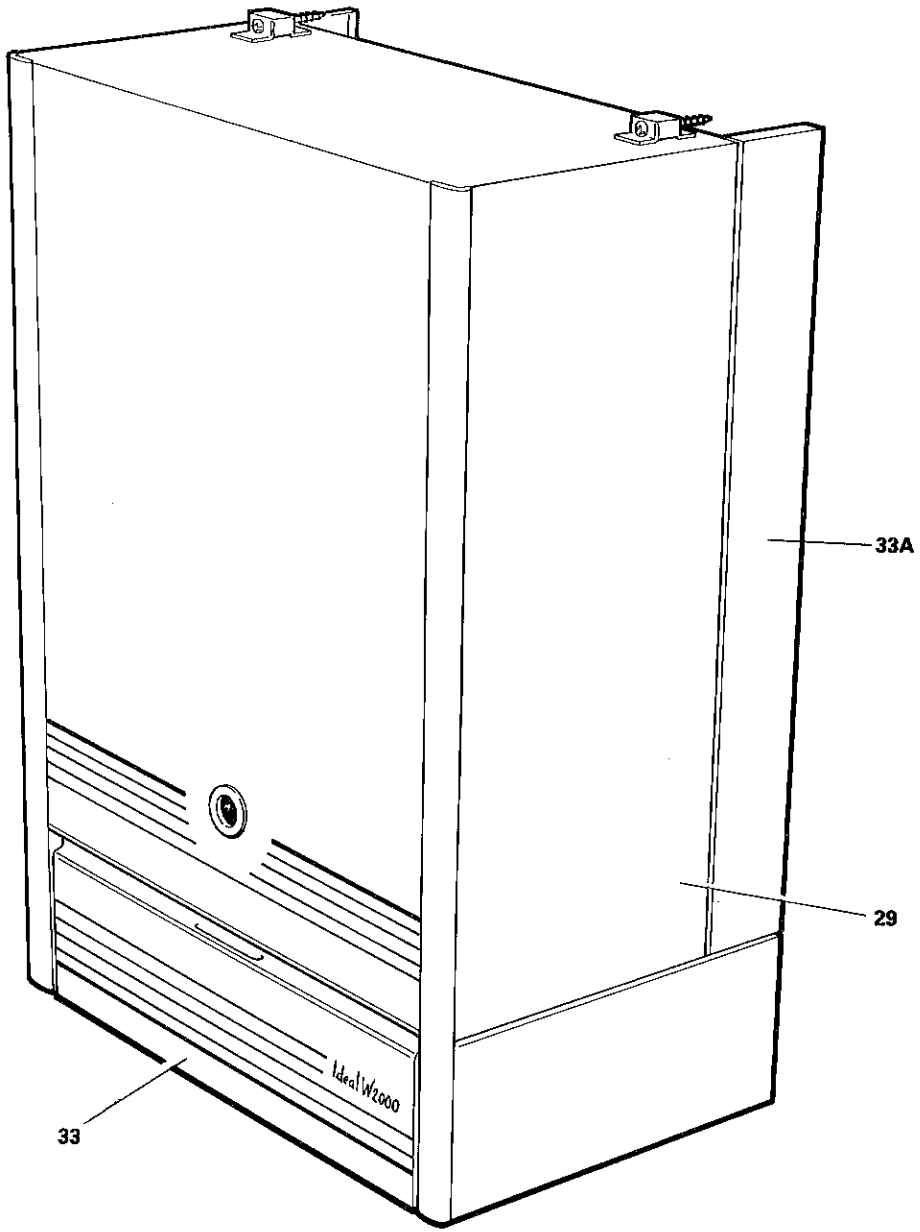

THIS SYMBOL IS YOUR ASSURANCE OF QUALITY

These appliances are designed for use with Natural Gas only. They have been tested and conform with the provisions of BS. 6332 & BS. 5258.

Products bearing this Kitemark are made to a safety and performance standard under a stringent scheme of supervision and control monitored by the British Standards Institute.

STELRAD GROUP pursues a policy of continuing improvement in design and performance of its products.The right is therefore, reserved to vary specification without notice.

STELRAD GROUP Limited
Sales and Marketing
Accord House, Goulton Street
Kingston upon Hull.
North Humberside. HU3 4DJ
Telephone: 0482'223673 Telex: 592786

Head and Registered Office;
Newtown Road, HENLEY-on-Thames. Oxfordshire
RG9 1HL
Registration No. London 322137

A SUBSIDIARY OF METAL BOX p.l.c.

H. 0568 (6) 6/90

Printed in England.

Stelrad Ideal